124-5

FIRE SERVICE INCORPORATED 27006

Subsidiary of Firecom, Inc.
39-27 Fifty Ninth Street
Woodside, New York 11377
(718) 899-2311

REPORT OF FIELD SERVICE

LOCATIONS | **DEVICES**

FLOOR	AREA'S		CABLE	X'MAR	SENS TEST	S/D
21	PASS	ELEV.	1	020	2.8	BLK
	COMM	A	1	204	3.0	BLK
	ELECT	A	1	204	3.0	BLK
	TELEPH	A	1	204	3.0	BLK
	FREIGHT	ELEV.	1	020	3.0	BLK
	ELECT	B	1	204	2.8	BLK
	COMM	B	1	204	3.0	BLK
	TELEPH	B	1	204	3.0	BLK
21	ELECT	C	1	205	3.0	BLK
	COMM	C	1	205	3.2	BLK
	TELEPH	C	1	205	3.0	BLK
	TELEPH	D	1	205	3.0	BLK
	COMM	D	1	205	3.2	BLK
	ELEC	D	1	205	3.0	BLK
21	CORE HER D/D		1	008	3.2	Hoshiki
(RE)	CORE HER D/D		1	008	3.2	Hoshiki
	-TO BE REPLACE		(UNIT DEFECTIVE)			
21	RETURN D/D SOUTH		1	007	3.0	Hoshiki
	RETURN D/D NORTH		1	007	3.2	Hoshiki
13	STROBE PANEL AFC 101 (B COMM)					
	(2) BATTERIES REPLACED - (2AH) -					
	TROUBLE / BATTERIES					

PREVENTIVE MAINTENANCE CONTRACT

INVOICE TO: W.T.C.
N.Y.C.

SERVICEMAN ASSIGNED: J. TORRES / F. ROSARIO	SEE AT JOB SITE: F.S.I.
	DATE SCHEDULED: 8-22-01
CONTRACT #: S/C00818	TYPE OF SYSTEM: CSW2000
FEE SERVICE #	P.O. #
CALL AUHTORIZED BY	PHONE / EXT

☒ MAINTENANCE ☐ TEST
☐ JOB COMPLETE ☐ JOB INCOMPLETE
☐ SYSTEM ON LINE ☐ SYSTEM OFF LINE

DEPARTED SHOP	TIME IN	TIME OUT	RETURNED SHOP	TOTAL HOURS
AM PM	8:00 AM PM	4:30 AM PM	AM PM	

MATERIAL RECORD

QUANTITY	DESCRIPTION	COST
2	12 VOLTS BATTERIES	69.95

CUSTOMER NAME (PRINT)
CUSTOMER SIGNATURE Miguel Rivera
SERVICEMAN SIGNATURE

AUTHORIZATION FOR FIRE ALARM INTERRUPTION
The undersigned has been advised by Fire Service Inc. representatives that it may be necessary to interrupt the fire protection service by disconnecting the system and/or a component in the performance of their assigned work.
The undersigned hereby assumes the responsibility for the notification of the authorities at the time the interruption is initiated and will take all of the precautions deemed necessary during this period of interruption and hold harmless Fire Service Inc. and its employees regarding resumption of the protection service during their service of the equipment.

TIME _____ DATE _____ NAME _____

SERVICE PERFORMED & REMAINING: S/CONTRACT - PREVENTIVE MAINTENANCE SMOKE DETECTOR TESTS - SENSITIVITY TEST AS (SHOWN ABOVE) — LOCATIONS ON 21ST FL. — A/30 TROUBLE SHOOTED 21ST FL. DUCT DETECTOR CORE HER (1) FIRST TO BE REPLACED (SENSITIVITY OUT RANGE). — UNIT SIF24 HOSHIKI TYPE. —

(A) INACCESSIBLE (B) MISSING (C) DEFECTIVE (D) OTHER

FIRE SERVICE INCORPORATED

:27007

Subsidiary of Firecom, Inc.
39-27 Fifty Ninth Street
Woodside, New York 11377
(718) 899-2311

REPORT OF FIELD SERVICE

LOCATIONS | **DEVICES**

FLOOR	AREA'S			CABLE	X/NDR	TST SENS	S/D.
20	COMM	A		1	203	2.8	BLK
	ELECT	A		1	203	3.0	BLK
	TERM	A		1	203	3.0	BLK
	ELEC	B		1	203	3.0	BLK
	COMM	B		1	203	3.0	BLK
	TERM	B		1	203	3.2	BLK
	ELEV.	PASS		1	019	3.0	BLK
	ELEV.	FREIGHT		1	019	2.8	BLK
	COMM	C		1	202	3.0	BLK
	ELEC	C		1	202	2.8	BLK
	TERM	C		1	202	3.0	BLK
	ELEC	D		1	202	3.0	BLK
	COMM	D		1	202	3.2	BLK
	TERM	D		1	202	3.0	BLK
	CORE	HEL D/D		1	006	3.2	Hoffman
	CORE	HEL D/D		1	006	3.2	Hoffman
	RETURN	D/D.		1	005	3.2	Hoffman
20	RETURN	D/D.		1	005	3.0	Hoffman
	RETURN	D/D	EAST	3	045	3.2	D13
46	STROBE	PNL	'B' COMM.	TROUBLE			SPATIAL
	REPAIRED	'A'	CIRCUIT	-	AS	F.S.D	-
	PANEL	RESTORED	TO NORMAL	-			

INVOICE TO: T.W.T.C.

N.Y.C.

SERVICEMAN ASSIGNED: J. TORRES / F. ROSARIO	SEE AT JOB SITE: 4-5-9.
	DATE SCHEDULED: 8-28-01
CONTRACT #: S/C 00 818	TYPE OF SYSTEM: LJN 2000
FEE SERVICE #	P.O. #
CALL AUTHORIZED BY	PHONE / EXT

☒ MAINTENANCE ☒ TEST
☐ JOB COMPLETE ☐ JOB INCOMPLETE
☐ SYSTEM ON LINE ☐ SYSTEM OFF LINE

DEPARTED SHOP	TIME IN	TIME OUT	RETURNED SHOP	TOTAL HOURS
AM / PM	800 AM/PM	430 PM	AM / PM	

MATERIAL RECORD

QUANTITY	DESCRIPTION	COST
	PREVENTIVE MAINTENANCE CONTRACT	

CUSTOMER NAME (PRINT): Sean O'Keeffe.

CUSTOMER SIGNATURE

SERVICEMAN SIGNATURE

AUTHORIZATION FOR FIRE ALARM INTERRUPTION
The undersigned has been advised by Fire Service Inc. representative that it may be necessary to interrupt the fire protection service by disconnecting the system and/or a component in the performance of their assigned work.
The undersigned hereby assumes the responsibility for the notification of the authorities at the time the interruption is initiated and will take all of the precautions deemed necessary during this period of interruption and hold Hamilton Fire Service Inc. and its employees regarding interruption of the protection service during their service of the equipment.

TIME

DATE

NAME

SERVICE PERFORMED & REMAINING: S/CONTRACT. - S/DETECTORS WITH MAG TESTER SENSITIVITY / 1ST QUARTERLY SEMI-ANNUAL SERVICE. - ALSO REPAIRED ON 46TH FLOOR STROBE PNL AFC100 - 'A' LOOP CIRCUIT CORRECTED. - SYSTEM OK / RESETED. -

(A) INACCESSIBLE (B) MISSING (C) DEFECTIVE (D) OTHER

FIRE SERVICE INCORPORATED

27064

Subsidiary of Firecom, Inc.
39-27 Fifty Ninth Street
Woodside, New York 11377
(718) 899-2311

REPORT OF FIELD SERVICE

LOCATIONS | **DEVICES**

INVOICE TO: T.W.T.C. / N.Y.C.

FLOOR	AREA			CABLE	XMOR	S/D	TEST SENS
23	PASS ELEV.			2	000	BLK	2-8
	COMM	B		2	169	BLK	3.0
	ELECT	B		2	169	BLK	3.0
	TELEPH	B		2	169	BLK	3.0
	ELECT	A		2	169	BLK	3.2
	COMM	A		2	169	BLK	3.0
	TELEPH	A		2	169	BLK	2.8
	FREIGHT ELEV			2	000	BLK.	3.0
	CORE HEN D/D			2	228	Hochiki	32
23	CORE HEN D/D			2	228	Hochiki	32
	ELECT	C		2	168	BLK	3.0
	COMM	C		2	168	BLK	3.0
	TELEPH	C		2	168	BLK	3.2
	COMM	D		2	168	BLK	3.0
	ELECT	D		2	168	BLK	3.0
	TELEPH	D		2	168	BLK	3.0
	RETURN D/D	LADIES		2	227	Hochiki	3.4
	RETURN D/D	NORTH		N/A - AS PREVIOUS			
23	RETURN D/D	SOUTH		N/A - AS PREVIOUS			
13	STROBE PNL	TROUBLE CONDITION			101 Model		
	CLEARED -	STATUS -					
14	SUB SYSTEM PNL TROUBLE - (UNIT IN TROUBLE / CORRECTIVE ACTION - 14TH FL)						
	ZONE WIRES LISTED TO (15TH FL) - (TB 6 7-8)						
	TO RESTORE, SUPV. WIRES TO WHEN SYSTEM IS RESTORED TO NORMAL CONDITION						

INVOICE TO: T.W.T.C. / N.Y.C.

SERVICEMAN ASSIGNED: J. Tourk / J. Rosario	SEE AT JOB SITE: J.S.D.
	DATE SCHEDULED: 8-29-01
CONTRACT #: S/C00 818	TYPE OF SYSTEM: USN 2000
FEE SERVICE #	P.O. #
CALL AUHTORIZED BY	PHONE / EXT
☑ MAINTENANCE	☐ TEST
☐ JOB COMPLETE	☐ JOB INCOMPLETE
☐ SYSTEM ON LINE	☐ SYSTEM OFF LINE

DEPARTED SHOP	TIME IN	TIME OUT	RETURNED SHOP	TOTAL HOURS
AM PM	8:00 AM PM	4:30 AM PM	AM PM	

MATERIAL RECORD

QUANTITY	DESCRIPTION	COST
	PREVENTIVE MAINTENANCE CONTRACT	

CUSTOMER NAME (PRINT): Sean O'Keeffe

CUSTOMER SIGNATURE:

SERVICEMAN SIGNATURE:

AUTHORIZATION FOR FIRE ALARM INTERRUPTION
The undersigned has been advised by Fire Service Inc. representative that it may be necessary to interrupt the fire protection service by disconnecting the system and/or a component in the performance of their assigned work.
The undersigned hereby assumes the responsibility for the notification of the authorities at the time the interruption is initiated and will take all of the precautions deemed necessary during the period of interruption and hold harmless Fire Service Inc. and its employees regarding interruption of the protection service during their service of the equipment.

TIME _____ DATE _____ NAME _____

SERVICE PERFORMED & REMAINING: Sensitivity Test / Maintenance as per Contract on 23rd Fl (Silberstein Bros Bld) - All Listed above - Repairs on 13th 14th Fl. Sub Systems — Left for F.S.D.

(A) INACCESSIBLE (B) MISSING (C) DEFECTIVE (D) OTHER

FIRE SERVICE INCORPORATED

:27065

Subsidiary of Firecom, Inc.
39-27 Fifty Ninth Street
Woodside, New York 11377
(718) 899-2311

REPORT OF FIELD SERVICE

LOCATIONS | **DEVICES**

FLOOR	Locations.		CASE	XTNR	S/D	TST SENS.
19	ELECT A		1	201	BLK	3.0
	COMM A		1	201	BLK	3.0
	TELEPH A		1	201	BLK	2.8
	ELECT B		1	201	BLK	2.8
	COMM B		1	201	BLK	3.0
	TELEPH B		1	201	BLK	3.0
	ELEV LOBBY	PASS	1	018	BLK	3.0
19	FREIGHT ELEV.		1	018	BLK	3.2
	ELECT C		1	200	BLK	3.0
	COMM C		1	200	BLK	2.8
	TELEPH C		1	200	BLK	2.8
	CORE HEAT	D/D	1	004	Honeywell	3.4
19	CORE HEAT	D/D	1	004	Honeywell	3.2
	PENNY RETURN	D/D	1	003	Honeywell	3.2
	PENNY RETURN	D/D	1	003	Honeywell	3.2
	ELECT D		1	200	BLK	3.0
	COMM D		1	200	BLK	3.0
	TELEPH D		1	200	BLK	3.0

INVOICE TO: T.W.T.C
N.Y.C.

SERVICEMAN ASSIGNED: J. Torre / F. Rosario	SEE AT JOB SITE: F.S.I
	DATE SCHEDULED: 9-4-01
CONTRACT #: S/C00818	TYPE OF SYSTEM: CSN2000
FEE SERVICE #	P.O. #
CALL AUHTORIZED BY	PHONE / EXT

☒ MAINTENANCE ☒ TEST
☐ JOB COMPLETE ☐ JOB INCOMPLETE
☐ SYSTEM ON LINE ☐ SYSTEM OFF LINE

DEPARTED SHOP	TIME IN	TIME OUT	RETURNED SHOP	TOTAL HOURS
AM PM	8:00 AM PM	4:30 AM PM	AM PM	

MATERIAL RECORD

QUANTITY	DESCRIPTION	COST
	PREVENTIVE MAINTENANCE CONTRACT	

(*) 47 WATERFLOW S/W 2 OHZ ALARM - CHECK TROUBLE SHOOTING DEVICE/TTB INPUT - DEVICE ISOLATED FROM TTB - TO BE MONITORED - (possible DEFECTIVE S/W DEVICE)

(*) 14" SMOKE PANEL SUB SYSTEM TROUBLE INV. TRACE/CHECK - INTO A SUB SYSTEM CODE 042 IN TROUBLE STATUS / PANEL DISPLAY FOUND SEVERAL ZONES DISABLED by TENANT - (MOVE-OUT.)

CUSTOMER NAME (PRINT): D. GIACOMAZZA
CUSTOMER SIGNATURE: 9/5/01
SERVICEMAN SIGNATURE:

SERVICE PERFORMED & REMAINING: PREV. MAINTENANCE / SMOKE DETECTOR UNITS SENSITIVITY CHECK ON 19th Fl as per SCHEDULE at LISTED ADDRESS

(*) ALSO CHECK TROUBLE SHOOTING FLOOR 47 W/FLOW (112) ALARM DEVICE ISOLATED FROM SYSTEM - TO BE MONITORED CLASS 'E' SYSTEM. - TO BE FOLLOW UP. AND 14" FL SUB SYSTEM - TO BE RESTORE TO NORMAL by TENANT (SUBMIT REPORT)

(A) INACCESSIBLE (B) MISSING (C) DEFECTIVE (D) OTHER

(INPUT LIFTED IN TTB SYSTEM / UNTIL S-SYSTEM - RESTORE ALARM STATUS

AUTHORIZATION FOR FIRE ALARM INTERRUPTION
The undersigned has been advised by Fire Service Inc. representative that it may be necessary to interrupt the fire protection service by disconnecting the system and/or a component in the performance of their assigned work.
The undersigned hereby assumes the responsibility for the notification of the authorities at the time the interruption is initiated and will take all of the precautions deemed necessary during the period of interruption and hold harmless Fire Service Inc. and its employees regarding interruption of the protection service during their service of the equipment.

NAME DATE TIME

FIRE SERVICE INCORPORATED

27066

Subsidiary of Firecom, Inc.
39-27 Fifty Ninth Street
Woodside, New York 11377
(718) 899-2311

REPORT OF FIELD SERVICE

LOCATIONS | **DEVICES**

INVOICE TO: TWTC / NYC

FLOOR	DEVICE			CABLE	ZONE	S/D	TEST SENS
18	COMM	A		1	199	BLK	3.2
	ELECT	A		1	199	BLK	3.0
	TELEPH	A		1	199	BLK	3.0
	PASS	ELEV.		1	017	BLK	3.0
18	FREIGHT	ELEV.		1	017	BLK	3.0
	ELECT	B		1	199	BLK	3.0
	COMM	B		1	199		2.8
	TELEPH	B		1	199		3.0
	ELECT	C		1	198	BLK	3.0
	TELEPH	C		1	198		3.2
	COMM	C		1	198		3.0
	ELECT	D		1	198	BLK	2.8
	COMM	D		1	198		2.8
18	TELEPH	D		1	198		3.0
	PLENUM	RETURN	D/D-N	1	001	Hochiki	3.2
	PLENUM	RET.	D/D SOUTH	1	001	Hochiki	3.2
	CORE	HEA	D/D	1	002	Hochiki	3.2
	POLE	HEA	D/D	1	002	Hochiki	3.4
17	PASS	ELEV.		1	016	BLK	3.0
	FREIGHT	ELEV.		1	016	BLK	3.0
	ELECT	A-B	(2)	1	197	BLK	3.0/2.8
	COMM	A-B	(2)	1	197	BLK	3.0
	TELEPH	A-B	(2)	1	197	BLK	3.0/2.8
	CORE	HEA	D/D	1	[illegible]	Hochiki	3.4
	CORE	HEA	D/D	1	000	Hochiki	3.4
	ELECT	C		1	196		
	COMM	C		1	196		
	TELEPH	C		1	196		
	TELEPH	D		1	196		
	COMM	D		1	196		
	ELECT	D		1	196		
17TH	(*)	RETURN	D/D	NOT	Available At		
		PREVIOUS	REPORTED				

SERVICEMAN ASSIGNED: L. TORRE / F. ROSALIA

SEE AT JOB SITE: F-S-I

DATE SCHEDULED: 9-05-01

CONTRACT #: S/C 818

TYPE OF SYSTEM: LSN2000

FEE SERVICE #: -

P.O. #:

CALL AUTHORIZED BY | PHONE | EXT

☒ MAINTENANCE ☒ TEST

☐ JOB COMPLETE ☐ JOB INCOMPLETE

☐ SYSTEM ON LINE ☐ SYSTEM OFF LINE

DEPARTED SHOP	TIME IN	TIME OUT	RETURNED SHOP	TOTAL HOURS
AM PM	900 PM	430 PM	AM PM	

MATERIAL RECORD

QUANTITY	DESCRIPTION	COST
	PREVENTIVE MAINTENANCE CONTRACT	

CUSTOMER NAME (PRINT): D GIACOMAZZI

CUSTOMER SIGNATURE: FSD 9/5/01

SERVICEMAN SIGNATURE:

AUTHORIZATION FOR FIRE ALARM INTERRUPTION
The undersigned has been advised by Fire Service Inc. representative that it may be necessary to interrupt the fire protection service by disconnecting the system and/or a component in the performance of their assigned work.
The undersigned hereby assumes the responsibility for the notification of the authorities at the time the interruption is initiated and will take all of the precautions deemed necessary during the period of interruption and hold Harmless Fire Service Inc. and its employees regarding interruption of fire protection service during their service of the equipment.

NAME _____ DATE _____ TIME _____

SERVICE PERFORMED & REMAINING: PREVENTIVE MAINTENANCE - CLASS E FIRE SYSTEM - SMOKE DETECTOR AREAS ABOVE LISTED 18TH/17TH FLOORS SENSITIVITY TESTED.

(*) NOTE RETURN DETECTOR NOT AVAILABLE - NO ACCESS PROVIDED CEILING SOLID - 17TH FLOOR

(A) ~~INACCESSIBLE~~ (B) MISSING (C) DEFECTIVE (D) OTHER

FIRE SERVICE INCORPORATED

102313

SUBSIDIARY OF FIRE ...M INC.

39-27 FIFTY NINTH STREET
WOODSIDE, NEW YORK 11377
(718) 899-2311

REPORT OF FIELD SERVICE

INVOICE TO

SERVICED

TWTC
New York, N.Y.

CALL AUTHORIZED BY		CONTRACT #	FEE SERVICE #	FJ #	PO #	SEE AT JOB SITE
		SC00818				F.S.D.
PHONE	EXT	DATE SCHEDULED	TIME SCHEDULED			SERVICEMAN ASSIGNED
		09-05-01	A.M.			[illegible] R.

MATERIAL RECORD

QUANTITY ISSUED	QUANTITY B/O	F.C.I. NO	DESCRIPTION	UNIT PRICE	PER	TOTAL AMOUNT
			PREVENTIVE MAINTENANCE CONTRACT -			

CHECK APPROPRIATE BOX

- ☐ Q.C
- ☐ I & T
- ☐ FEE CALL
- ☐ DELIVERY
- ☐ DEMO
- ☐ EMERGENCY CALL
- ☑ CONTRACT CALL
- ☐ PICK UP
- ☐ DEMO OWNER
- ☐ SURVEY

DEPARTED SHOP	TIME IN	TIME OUT	RETURNED SHOP	TOTAL HOURS	START MILEAGE	END MILEAGE	MISC EXPENSE	CAR FARE
	8:00 A.M.	4:30 P.M.						

- ☐ MAT REQD
- ☐ PARTIAL
- ☐ OTHER
- ☐ LABOR REQD

I & T COMPLETE ☐ CALL COMPLETE ☐

SERVICE DATE: 09-05-01

WILL RETURN ON:

CUSTOMER SIGNATURE: [signature] 9/5/01

SERVICEMAN SIGNATURE: [signature]

AUTHORIZATION FOR FIRE ALARM INTERRUPTION

The undersigned has been advised by Fire Service, Inc. representative that it may be necessary to interrupt the fire protection service by disconnecting the system and/or a component in the performance of their assigned work.

The undersigned hereby assumes the responsibility for the notification of the authorities at the time the interruption is released and will take all the precautions deemed necessary during the period of interruption and hold harmless Fire Service Inc. and its employees regarding interruption of the protection service during their service of the equipment.

Date

Name

PROBLEM—AS DESCRIBED

Service Maintenance

SERVICE PERFORMED

Assisting Timmy T. during the performing of the Service Maintenance.

WORK REMAINING

FCI 155

FIRE SERVICE INCORPORATED

102312

SUBSIDIARY OF FIRE[illegible] INC.

39-27 FIFTY NINTH STREET
WOODSIDE, NEW YORK 11377
(718) 899-2311

REPORT OF FIELD SERVICE

INVOICE TO

SERVICED TWTC Woodhaven, NY

CALL AUTHORIZED BY		CONTRACT #	FEE SERVICE #	FJ #	P O #	SEE AT JOB SITE
		9C00818				F.S.D.
PHONE	**EXT**	**DATE SCHEDULED**	**TIME SCHEDULED**			**SERVICEMAN ASSIGNED**
		09-04-01	A.M.			Frank R

MATERIAL RECORD

QUANTITY ISSUED	QUANTITY B/O	F C I NO	DESCRIPTION	UNIT PRICE	PER	TOTAL AMOUNT
			PREVENTIVE MAINTENANCE CONTRACT			

CHECK APPROPRIATE BOX

- ☐ O.C
- ☐ I & T
- ☐ FEE CALL
- ☐ DELIVERY
- ☐ DEMO
- ☐ EMERGENCY CALL
- ☑ CONTRACT CALL
- ☐ PICK UP
- ☐ DEMO OWNER
- ☐ SURVEY

DEPARTED SHOP	TIME IN	TIME OUT	RETURNED SHOP	TOTAL HOURS	START MILEAGE	END MILEAGE	MISC EXPENSE	CAR FARE
8:00 A.M.	9:00 A.M.	4:30 P.M.						

- ☐ MAT REQD
- ☐ PARTIAL
- ☐ OTHER
- ☐ LABOR REQD

I & T COMPLETE ☐ CALL COMPLETE ☐

SERVICE DATE: 09-04-01

WILL RETURN ON:

CUSTOMER SIGNATURE: [signature] FSD 9/5/01

SERVICEMAN SIGNATURE: [signature]

PROBLEM—AS DESCRIBED

Service Maintainence

SERVICE PERFORMED

Assisting Jimmy T. In The Performing of The Service Maintainence.

WORK REMAINING

FCI 155
REV 6186

AUTHORIZATION FOR FIRE ALARM INTERRUPTION

The undersigned has been advised by Fire Service Inc. representative that it may be necessary to interrupt the fire protection service by disconnecting the system and/or a component in the performance of their assigned work.

The undersigned hereby assumes the responsibility for the notification of the authorities at the time the interruption is initiated and will take all of the precautions deemed necessary during the period of interruption and hold harmless Fire Service Inc. and its employees regarding interruption of fire protection service during their service of the equipment.

Date

Name

FIRE SERVICE INCORPORATED

97685

SUBSIDIARY OF FIRE COM INC.

39-27 FIFTY NINTH STREET
WOODSIDE, NEW YORK 11377
(718) 899-2311

REPORT OF FIELD SERVICE

INVOICE TO

SERVICED

7 WTC
New York, NY.

CALL AUTHORIZED BY	CONTRACT #	FEE SERVICE #	F.I.#	P.O. #	SEE AT JOB SITE
	SC00818				F.S.D.

PHONE	EXT.	DATE SCHEDULED	TIME SCHEDULED	SERVICEMAN ASSIGNED
		08/15/01	AM.	Frank L.

MATERIAL RECORD

QUANTITY ISSUED	QUANTITY B/O	F C I NO	DESCRIPTION	UNIT PRICE	PER	TOTAL AMOUNT

PREVENTIVE MAINTENANCE CONTRACT

CHECK APPROPRIATE BOX

- ☐ Q.C
- ☐ I & T
- ☐ FEE CALL
- ☐ DELIVERY
- ☐ DEMO
- ☐ EMERGENCY CALL
- ☑ CONTRACT CALL
- ☐ PICK UP
- ☐ DEMO OWNER
- ☐ SURVEY

DEPARTED SHOP	TIME IN	TIME OUT	RETURNED SHOP	TOTAL HOURS	START MILEAGE	END MILEAGE	MISC EXPENSE	CAR FARE
	8:00 AM.	4:30 PM.						

- ☐ MAT REQD
- ☐ PARTIAL
- ☐ OTHER
- ☐ LABOR REQD

I & T COMPLETE ☐ CALL COMPLETE ☐

SERVICE DATE: 08/15/01

WILL RETURN ON:

CUSTOMER SIGNATURE: S O'Keeffe

SERVICEMAN SIGNATURE: Frank L.

AUTHORIZATION FOR FIRE ALARM INTERRUPTION

The undersigned has been advised by Fire Service, Inc. representative that it may be necessary to interrupt the fire protection service by disconnecting the system and/or a components in the performance of their assigned work.

The undersigned hereby assumes the responsibility for the notification of the authorities at the time the interruption is initiated and will take all of the precautions deemed necessary during the period of interruption and hold harmless Fire Service Inc. and its employees regarding interruption of the protection service during their service of the equipment.

Date

Name

PROBLEM—AS DESCRIBED

Service Contract

SERVICE PERFORMED

Associated Fire Service per the foregoing Service Contract maintained, tested, cleaned and operability of the Smoke Detectors, On 24th Floor etc.

WORK REMAINING

FCI 155
REV 6186

FIRE SERVICE INCORPORATED

97687

SUBSIDIARY OF FIRE[illegible]M INC.

39-27 FIFTY NINTH STREET
WOODSIDE, NEW YORK 11377
(718)899-2311

REPORT OF FIELD SERVICE

INVOICE TO

SERVICED

7 WTC
New York, N.Y.

CALL AUTHORIZED BY	CONTRACT #	FEE SERVICE #	FJ #	P O #	SEE AT JOB SITE
	S-00818				F.S.D.

PHONE	EXT.	DATE SCHEDULED	TIME SCHEDULED	SERVICEMAN ASSIGNED
		08/22/01	11 AM.	Frank R.

MATERIAL RECORD

QUANTITY ISSUED	QUANTITY B/O	F C I NO	DESCRIPTION	UNIT PRICE	PER	TOTAL AMOUNT
			PREVENTIVE MAINTENANCE CONTRACT			

CHECK APPROPRIATE BOX

- ☐ Q.C
- ☐ I & T
- ☐ FEE CALL
- ☐ DELIVERY
- ☐ DEMO
- ☐ EMERGENCY CALL
- ☑ CONTRACT CALL
- ☐ PICK UP
- ☐ DEMO OWNER
- ☐ SURVEY

DEPARTED SHOP	TIME IN	TIME OUT	RETURNED SHOP	TOTAL HOURS	START MILEAGE	END MILEAGE	MISC EXPENSE	CAR FARE
	8:00 AM.	4:30 P.M.						

- ☐ MAT REQD
- ☐ PARTIAL
- ☐ OTHER
- ☐ LABOR REQD

SERVICE DATE: 08/22/01

WILL RETURN ON:

I & T COMPLETE ☐ CALL COMPLETE ☐

CUSTOMER SIGNATURE: [signature]

SERVICEMAN SIGNATURE: Frank R.

AUTHORIZATION FOR FIRE ALARM INTERRUPTION

The undersigned has been advised by Fire Service, Inc. representative that it may be necessary to interrupt the fire protection service by disconnecting the system and/or a component in the performance of their assigned work.

The undersigned hereby assumes the responsibility for the notification of the authorities at the time the interruption is initiated and will take all of the precautions deemed necessary during the period of interruption and hold harmless Fire Service Inc. and its employees regarding interruption of the protection service during their service of the equipment.

Date

Name

PROBLEM—AS DESCRIBED

Service Contract

SERVICE PERFORMED

Testing Devices See the Inspection of Fire Service Contract.

WORK REMAINING

FCI 155
REV 6186

FIRE SERVICE INCORPORATED

97688

SUBSIDIARY OF FIRE[illegible]M INC.

39-27 FIFTY NINTH STREET
WOODSIDE, NEW YORK 11377
(718) 899-2311

REPORT OF FIELD SERVICE

INVOICE TO

SERVICED

7W TF
New York, NY.

CALL AUTHORIZED BY		CONTRACT #	FEE SERVICE #	FJ #	PO #	SEE AT JOB SITE
		Sco08/18				F.S.D.
PHONE	**EXT.**	**DATE SCHEDULED**	**TIME SCHEDULED**			**SERVICEMAN ASSIGNED**
		08/21/01	AM.			Frank L.

MATERIAL RECORD

QUANTITY ISSUED	QUANTITY B/O	F C I NO	DESCRIPTION	UNIT PRICE	PER	TOTAL AMOUNT
			PREVENTIVE MAINTENANCE CONTRACT			

CHECK APPROPRIATE BOX

- ☐ Q.C
- ☐ I & T
- ☐ FEE CALL
- ☐ DELIVERY
- ☐ DEMO
- ☐ EMERGENCY CALL
- ☑ CONTRACT CALL
- ☐ PICK UP
- ☐ DEMO OWNER
- ☐ SURVEY

DEPARTED SHOP	TIME IN	TIME OUT	RETURNED SHOP	TOTAL HOURS	START MILEAGE	END MILEAGE	MISC EXPENSE	CAR FARE
	8:00 AM.	4:30 PM.						

- ☐ MAT RECD
- ☐ PARTIAL
- ☐ OTHER
- ☐ LABOR RECD

I & T COMPLETE ☐ CALL COMPLETE ☐

SERVICE DATE: 08/21/01

WILL RETURN ON:

CUSTOMER SIGNATURE: Miguel Rivera

SERVICEMAN SIGNATURE: Frank L.

PROBLEM—AS DESCRIBED

Service Contract

SERVICE PERFORMED

Assisting Tyco On the Testing Of The Service Called In.

WORK REMAINING

FCI 155
REV 6186

AUTHORIZATION FOR FIRE ALARM INTERRUPTION

The undersigned has been advised by Fire Service, Inc., representative that it may be necessary to interrupt the fire protection service by disconnecting the system and/or a component in the performance of their assigned work.

The undersigned hereby assumes the responsibility for the notification of the authorities at the time the interruption is initiated and will take all of the precautions deemed necessary during the period of interruption and hold harmless Fire Service Inc. and its employees regarding interruption of the protection service during their service of the equipment.

Date

Name

FIRE SERVICE INCORPORATED

97689

SUBSIDIARY OF FIRECOM INC.

39-27 FIFTY NINTH STREET
WOODSIDE, NEW YORK 11377
(718) 899-2311

REPORT OF FIELD SERVICE

INVOICE TO

SERVICED

TWTC
New York, N.Y.

CALL AUTHORIZED BY	CONTRACT #	FEE SERVICE #	F.I #	P.O #	SEE AT JOB SITE
	Sc00818				F.S.I.

PHONE	EXT	DATE SCHEDULED	TIME SCHEDULED	SERVICEMAN ASSIGNED
		8/29/01	A.M.	

MATERIAL RECORD

QUANTITY ISSUED	QUANTITY B/O	F C I NO	DESCRIPTION	UNIT PRICE	PER	TOTAL AMOUNT
					PREVENTIVE MAINTENANCE CONTRACT	

AUTHORIZATION FOR FIRE ALARM INTERRUPTION

The undersigned has been advised by Fire Service, Inc. representative that it may be necessary to interrupt the fire protection service by disconnecting the system and/or a component in the performance of their assigned work.

The undersigned hereby assumes the responsibility for the notification of the authorities at the time the interruption is initiated and at the time of the precautions deemed necessary during the period of interruption and hold harmless Fire Service Inc. and its employees regarding interruption of fire protection service during their service of the equipment.

Date

Name

CHECK APPROPRIATE BOX

- ☐ O. C
- ☐ I & T
- ☐ FEE CALL
- ☐ DELIVERY
- ☐ DEMO
- ☐ EMERGENCY CALL
- ☑ CONTRACT CALL
- ☐ PICK UP
- ☐ DEMO OWNER
- ☐ SURVEY

DEPARTED SHOP	TIME IN	TIME OUT	RETURNED SHOP	TOTAL HOURS	START MILEAGE	END MILEAGE	MISC EXPENSE	CAR FARE

- ☐ MAT RECD
- ☐ PARTIAL
- ☐ OTHER
- ☐ LABOR RECD

SERVICE DATE: 8/29/01

CUSTOMER SIGNATURE: Sean O'Keeffe

WILL RETURN ON

SERVICEMAN SIGNATURE: Frank L.

I & T COMPLETE ☐ CALL COMPLETE ☐

PROBLEM—AS DESCRIBED

Service Contract

SERVICE PERFORMED

Assisting Vivint To Do The Performing Of The Service Contract.

WORK REMAINING

FCI 155
REV 6186

FIRE SERVICE INCORPORATED

97690

SUBSIDIARY OF FIRE[illegible] INC.

39-27 FIFTY NINTH STREET
WOODSIDE, NEW YORK 11377
(718) 899-2311

REPORT OF FIELD SERVICE

INVOICE TO

SERVICED

TWTG
New York, NY.

CALL AUTHORIZED BY	CONTRACT #	FEE SERVICE #	FJ #	PO #	SEE ATTACHED SITE
	Sec0818				F.S.J.
PHONE / **EXT**	**DATE SCHEDULED**	**TIME SCHEDULED**			**SERVICEMAN ASSIGNED**
	8/28/01	A.M.			Frank L.

MATERIAL RECORD

QUANTITY ISSUED	QUANTITY B/O	FCI NO	DESCRIPTION	UNIT PRICE	PER	TOTAL AMOUNT
					PREVENTIVE MAINTENANCE CONTRACT	

CHECK APPROPRIATE BOX

- ☐ Q.C
- ☐ I & T
- ☐ FEE CALL
- ☐ DELIVERY
- ☐ DEMO
- ☑ EMERGENCY CALL
- ☐ CONTRACT CALL
- ☐ PICK UP
- ☐ DEMO OWNER
- ☐ SURVEY

DEPARTED SHOP	TIME IN	TIME OUT	RETURNED SHOP	TOTAL HOURS	START MILEAGE	END MILEAGE	MISC EXPENSE	CAR FARE
	8:00 AM	4:30 PM						

☐ MAT RECD ☐ PARTIAL
☐ OTHER ☐ LABOR RECD

I & T COMPLETE ☐ CALL COMPLETE ☐

SERVICE DATE: 8/28/01

WILL RETURN ON:

CUSTOMER SIGNATURE: Sean O'Keeffe

SERVICEMAN SIGNATURE: Frank L.

AUTHORIZATION FOR FIRE ALARM INTERRUPTION

The undersigned has been advised by Fire Service, Inc. representative that it may be necessary to interrupt the fire protection service by disconnecting the system and/or a component in the performance of their assigned work.

The undersigned hereby assumes the responsibility for the notification of the authorities at the time the interruption is initiated and will take all of the precautions deemed necessary during the period of interruption and hold harmless Fire Service Inc. and its employees regarding interruption of the protection service during their service of the equipment.

Name

Date

PROBLEM—AS DESCRIBED

Service Contract

SERVICE PERFORMED

Attached Proof of Service Contract

WORK REMAINING

FCI 155
REV 6186

FIRE SERVICE INCORPORATED

23499

Subsidiary of Firecom, Inc.
39-27 Fifty Ninth Street
Woodside, New York 11377
(718) 899-2311

REPORT OF FIELD SERVICE

LOCATIONS			DEVICES				
FLOOR	ALARM	CLOSET		XMTR	CABLE	SENS	S/D
24	PASS ELEV.			001	2	2.8	BLK
	FREIGHT ELEV			001	2	2.8	BLK
	COMM	A	CLOSET	171	2	3.0	BLK
	ELECT	A	"	171	2	3.0	BLK
	TELEPH	A	"	171	2	3.0	BLK
	COMM	B	"	171	2	3.0	BLK
	ELECT	B		171	2	2.8	BLK
	TELEPH	B		171	2	3.0	BLK
24	ELECT	C		173	2	3.0	BLK
	COMM	C		173	2	3.2	BLK
	TELEPH	C		173	2	3.0	BLK
	ELECT	D		173	2	2.8	BLK
	COMM	D		173	2	3.0	BLK
	TELEPH	D		173	2	3.0	BLK
	RETURN DUCT DET. NORTH			230	2	3.2	Hochiki
	RETURN DUCT DET. SOUTH			230	2	3.2	Hochiki
	BOOSTER D/D			231	2	3.2	Hochiki
25	BOOSTER D/D			231	2	3.0	Hochiki
16	STROBE PWR			Replaces AFC 100			
	A-B LOOPS -			BATTERIES (NEGED)			
				(2) 12 VOLTS. -			
				To Replace. -			

PREVENTIVE MAINTENANCE CONTRACT

INVOICE TO: W.T.C.
N.Y.C.

SERVICEMAN ASSIGNED: J. TORRES, F. ROSARIO
SEE AT JOB SITE: F.S.I.
DATE SCHEDULED: 8-15-01
CONTRACT #: S1C00818
TYPE OF SYSTEM: ZSN2000
FEE SERVICE #:
P.O. #:
CALL AUHTORIZED BY | PHONE | EXT

☒ MAINTENANCE ☐ TEST
☐ JOB COMPLETE ☐ JOB INCOMPLETE
☐ SYSTEM ON LINE ☐ SYSTEM OFF LINE

DEPARTED SHOP	TIME IN	TIME OUT	RETURNED SHOP	TOTAL HOURS
AM PM	800 AM PM	430 PM PM	AM PM	

MATERIAL RECORD

QUANTITY	DESCRIPTION	COST

CUSTOMER NAME (PRINT): J. TORRES
CUSTOMER SIGNATURE:
SERVICEMAN SIGNATURE:

AUTHORIZATION FOR FIRE ALARM INTERRUPTION
The undersigned has been advised by Fire Service Inc. representatives that it may be necessary to interrupt the fire protection service by disconnecting the system and/or a component in the performance of their assigned work.
The undersigned hereby assumes the responsibility for the notification at the time the interruption is restored and will take all of the precautions deemed necessary during the period of interruption and hold harmless Fire Service Inc. and its employees regarding interruption of fire protection service during their service of the equipment.

TIME
DATE
X
NAME

SERVICE PERFORMED & REMAINING: As per Contract - Preventive Maintenance on Smoke Detectors 24 F.I. - as listed above. Sensitivity Test Serviced all Areas / Closets - M.E.R.'s - Elevator Lobbies. - System Back Restored Back to Operation. -
Also Replaced on 16 Fl AFC 100 Panel - as per F.S.I. Trouble / Dentt (Negged) (2) Batteries 12 Volts. - To replace. -

(A) INACCESSIBLE (B) MISSING (C) DEFECTIVE (D) OT

FIRE SERVICE INCORPORATED

: 23500

Subsidiary of Firecom, Inc.
39-27 Fifty Ninth Street
Woodside, New York 11377
(718) 899-2311

REPORT OF FIELD SERVICE

LOCATIONS			DEVICES				
FLOOR	Area's -			Qty.	Zone	Test Secs	Cleaned
22	Elev. Lobby			1	021	3.0	✓
	Elect	A		1	207	3.2	✓
	Comm	A		1	207	3.0	✓
	Elevph	A		1	207	3.0	✓
	Telephone	B		1	207	3.0	✓
	Elect	B		1	207	2.8	✓
	Comm	B		1	207	3.0	✓
22	Freight Elev			1	021	3.2	✓
	Elect	C		1	206	3.0	✓
	Comm	C		1	206	3.0	✓
	Telephone	C		1	206	3.0	✓
	Telephone	D		1	206	2.8	✓
	Elect	D		1	206	2.8	✓
	Comm	D		1	206	3.0	✓
	Return Duct Det. S.			1	009	3.2	✓
	Return D/D	North		1	009	3.2	✓
	Core Mech	D/D		1	010	3.0	✓
22	Core Mech	D/D		1	010	3.2	✓
16	STROBE PANEL (AFC 100) Core Mech.						
	Replaced (2) BATTERIES 12 VOLTS.						
	- Back up Pwr. -						
44	Security (Solomon Brothers) Office Panel						
	Unit Check For Operation / Running						
	As per Request. -						

PREVENTIVE MAINTENANCE CONTRACT

INVOICE TO: T.W.T.C.
N.Y.C.
22nd Fl

SERVICEMAN ASSIGNED: J. Torres / F. Rosario	SEE AT JOB SITE: F.S.I.
	DATE SCHEDULED: 8.21-01
CONTRACT #: S/C 00 818	TYPE OF SYSTEM: LSN 2001
FEE SERVICE #	P.O. #
CALL AUHTORIZED BY	PHONE / EXT
☒ MAINTENANCE	☒ TEST
☐ JOB COMPLETE	☐ JOB INCOMPLETE
☐ SYSTEM ON LINE	☐ SYSTEM OFF LINE

DEPARTED SHOP	TIME IN	TIME OUT	RETURNED SHOP	TOTAL HOURS
AM / PM	900 AM / PM	430 AM / PM	AM / PM	

MATERIAL RECORD

QUANTITY	DESCRIPTION	COST
2	12 VOLTS BATTERIES	69.95

AUTHORIZATION FOR FIRE ALARM INTERRUPTION
The undersigned has been advised by Fire Service Inc. representative that it may be necessary to interrupt the fire protection service by disconnecting the system and/or a component in the performance of their assigned work.
The undersigned hereby assumes the responsibility for the notification of the authorities at the time the interruption is initiated and will take all of the precautions deemed necessary during the period of interruption and hold harmless Fire Service Inc. and its employees regarding interruption of fire protection service during this service of the equipment.

TIME / DATE / NAME

CUSTOMER NAME (PRINT)
CUSTOMER SIGNATURE Miguel Ramos
SERVICEMAN SIGNATURE

SERVICE PERFORMED & REMAINING 5/CONTRACT. — 0

Preventive Maintenance & Sensitivity Test Performed on Smoke Detector Area Base Listed on 22nd Floor. (Silvestrin Spares) -

Also Performed Repairs in 16th Fl. (2) Batteries 12 Volts Replaced. - For Strobe Pnl AFC 100 - (Old Batts Defective). -

(A) INACCESSIBLE (B) MISSING (C) DEFECTIVE (D) OTHER

FIRE SERVICE INCORPORATED : 23498

Subsidiary of Firecom, Inc.
39-27 Fifty Ninth Street
Woodside, New York 11377
(718) 899-2311

REPORT OF FIELD SERVICE

LOCATIONS | **DEVICES**

FLOOR	AREA	CLOSET		CABLE	XTND	S/D	SENS TEST
25	PASS	ELEV.		2	002	BRK	3.0
	FREIGHT	ELEV.		2	002	EDWD	3.2
	ELECT	B		2	174	BRK	3.0
	COMM	B		2	174	BRK	3.0
	TELEPH	B		2	174	BRK	3.0
	ELECT	A		2	174	BRK	3.0
	COMM	A		2	174	BRK	3.0
	TELEPH	A		2	174	BRK	3.0
	ELECT	C		2	173	BRK	3.0
	COMM	C		2	173	BRK	3.2
	TELEPH	C		2	173	BRK	3.0
	ELECT	D		2	173	BRK	3.0
	COMM	D		2	173	BRK	3.2
	TELEPH	D		2	173	BRK	3.2
25	CORE	MER	DUCT DET	2	233	HOCHKI	3.2
	CORE	MER	DUCT DET	2	233	HOCHKI	3.4
	RETURN	DUCT	DET NORTH	2	232	HOCHKI	3.2
25	RETURN	DUCT	DET SOUTH	2	232	HOCHKI	3.2

INVOICE TO: T.W.T.C. N.Y.C.

SERVICEMAN ASSIGNED: G. TORRES / F. ROSARIO	SEE AT JOB SITE: F.S.D.
	DATE SCHEDULED: 8-14-01
CONTRACT #: S/C 00 818	TYPE OF SYSTEM: LSN 2000
FEE SERVICE #	P.O. #
CALL AUHTORIZED BY	PHONE / EXT

☑ MAINTENANCE ☐ TEST

☐ JOB COMPLETE ☐ JOB INCOMPLETE

☑ SYSTEM ON LINE ☐ SYSTEM OFF LINE

DEPARTED SHOP	TIME IN	TIME OUT	RETURNED SHOP	TOTAL HOURS
800 AM/PM	900 AM/PM	430 AM/PM	AM/PM	

MATERIAL RECORD

QUANTITY	DESCRIPTION	COST

13 STROBE PNL CHECK FOR TROUBLE/RESET AFC 100 PANEL - ADJUSTED OUTPUT VOLTAGE AT PANEL. -

PREVENTIVE MAINTENANCE CONTRACT

CUSTOMER NAME (PRINT): S. O'Keeffe

CUSTOMER SIGNATURE:

SERVICEMAN SIGNATURE:

SERVICE PERFORMED & REMAINING: PREV. MAINTENANCE. — SENSITIVITY TEST. — SERVICE CONTRACT - ON SMOKE DETECTORS ABOVE / LOCATED ON 25TH FLOOR AS LISTED ABOVE - ALSO REPAIR IN STROBE PANEL 13TH B. COMM. CLOSET AFC 100 AS PER F.S.D. - REQUEST (BLG). - TROUBLE / TROUBLE RESETED. - BACK TO NORMAL. —

AUTHORIZATION FOR FIRE ALARM INTERRUPTION
The undersigned has been advised by Fire Service Inc. representative that it may be necessary to interrupt the fire protection service by disconnecting the system and/or a component in the performance of their assigned work.
The undersigned hereby assumes the responsibility for the notification of the authorities at the time the interruption is initiated and will take all of the precautions deemed necessary during this period of interruption and hold harmless Fire Service Inc. and its employees regarding interruption of fire protection service during their service of the equipment.

NAME _____ DATE _____ TIME _____

(A) INACCESSIBLE (B) MISSING (C) DEFECTIVE (D) OTHER

FIRE SERVICE INCORPORATED

103631

SUBSIDIARY OF FI[illegible]OM INC.

39-27 FIFTY NINTH STREET
WOODSIDE, NEW YORK 11377
(718)899-2311

REPORT OF FIELD SERVICE

INVOICE TO

SERVICED

7 WTC
NY. NY.

CALL AUTHORIZED BY	CONTRACT #	FEE SERVICE #	FJ #	P O #	SEE ALSO JOB SITE
Shop	818				F/S/P
PHONE / EXT	DATE SCHEDULED	TIME SCHEDULED			SERVICEMAN ASSIGNED
	7/3/01	am/pm			

MATERIAL RECORD

QUANTITY ISSUED	QUANTITY B/O	F C I NO	DESCRIPTION	UNIT PRICE	PER	TOTAL AMOUNT
			PREVENTIVE MAINTENANCE CONTRACT			

AUTHORIZATION FOR FIRE ALARM INTERRUPTION

The undersigned has been advised by Fire Service Inc. representative that it may be necessary to interrupt the fire protection service by disconnecting the system and/or a component in the performance of their assigned work.
The undersigned hereby assumes the responsibility for the notification of the authorities at the time the interruption is initiated and will take all of the precautions deemed necessary during the period of interruption and hold harmless Fire Service Inc. and its employees regarding interruption of the protection service during their service of the equipment.

Date

Name

CHECK APPROPRIATE BOX

- ☐ O. C
- ☐ I & T
- ☐ FEE CALL
- ☐ DELIVERY
- ☐ DEMO
- ☑ EMERGENCY CALL
- ☐ CONTRACT CALL
- ☐ PICK UP
- ☐ DEMO OWNER
- ☐ SURVEY

DEPARTED SHOP	TIME IN	TIME OUT	RETURNED SHOP	TOTAL HOURS	START MILEAGE	END MILEAGE	MISC EXPENSE	CAR FARE
8 am	9 am	3:30 pm	4:30 pm					

- ☐ MAT RFOD ☐ PARTIAL
- ☐ OTHER ☐ LABOR RECD

SERVICE DATE: 7/03/01

CUSTOMER SIGNATURE: L. Mercado

I & T COMPLETE ☐ CALL COMPLETE ☐

WILL RETURN ON

SERVICEMAN SIGNATURE

PROBLEM—AS DESCRIBED — trouble call —

SERVICE PERFORMED Assisted technician Jimmy T.
for more information see report #
16th floor strobe panel & 46th floor elev. lobby det.
Trouble status repairs.
System Operational

WORK REMAINING

FCI 155
REV 6/86

FIRE SERVICE INCORPORATED

97626

SUBSIDIARY OF FI. ..OM INC.
39-27 FIFTY NINTH STREET
WOODSIDE, NEW YORK 11377
(718) 899-2311

REPORT OF FIELD SERVICE

INVOICE TO

SERVICED
T.W.T.C. —
N.Y.C.

CALL AUTHORIZED BY	CONTRACT #	FEE SERVICE #	FJ #	PO #	SEE AT JOB SITE
K.W	0818				F.S.D.
PHONE / **EXT**	**DATE SCHEDULED**	**TIME SCHEDULED**			**SERVICEMAN ASSIGNED**
	7-2-01	AM			J. TORRE

MATERIAL RECORD

QUANTITY ISSUED	QUANTITY B/O	F C I NO	DESCRIPTION	UNIT PRICE	PER	TOTAL AMOUNT
			PREVENTIVE MAINTENANCE CONTRACT			

AUTHORIZATION FOR FIRE ALARM INTERRUPTION

The undersigned has been advised by Fire Service, Inc. representative that it may be necessary to interrupt the fire protection service by disconnecting the system and/or a component in the performance of their assigned work.
The undersigned hereby assumes the responsibility for the notification of the authorities at the time the interruption is necessary and will take all the precautions deemed necessary during the period of interruption and hold harmless Fire Service Inc. and its employees regarding interruption of the protection service during their service of the equipment.

Date

Name

CHECK APPROPRIATE BOX

- ☐ Q.C
- ☐ I & T
- ☐ FEE CALL
- ☐ DELIVERY
- ☐ DEMO
- ☐ EMERGENCY CALL
- ☑ CONTRACT CALL
- ☐ PICK UP
- ☐ DEMO OWNER
- ☐ SURVEY

DEPARTED SHOP	TIME IN	TIME OUT	RETURNED SHOP	TOTAL HOURS	START MILEAGE	END MILEAGE	MISC EXPENSE	CAR FARE
800	900	3:30						
AM		PM						

- ☐ MAT REQD ☐ PARTIAL
- ☐ OTHER ☐ LABOR REQD

SERVICE DATE: 7-2-01

CUSTOMER SIGNATURE: L. Mercado

I & T COMPLETE ☐ CALL COMPLETE ☐

WILL RETURN ON

SERVICEMAN SIGNATURE: J. Torre

PROBLEM—AS DESCRIBED: Repairs As per Previous S/Contract Reports. / STOBER

SERVICE PERFORMED: S/Contract - Check Troubleshooted 39th Floor Stobe Panel Defective Circuits 'A' - 'B' - Wiring Check Found (1) Unit with Loose Wire Wall Type (Woodlock) on 'B' Circuit / and Loose E.O.L. on 'A' Circuit by Restroom's. - Circuits Rewired Back in Operation / System Check/Tested Back in Operation /

WORK REMAINING

FCI 155
REV 8/86

FIRE SERVICE INCORPORATED

103630

SUBSIDIARY OF FI. . :OM INC.
39-27 FIFTY NINTH STREET
WOODSIDE, NEW YORK 11377
(718)899-2311

REPORT OF FIELD SERVICE

INVOICE TO

SERVICED
7 WTC
NY. NY.

CALL AUTHORIZED BY		CONTRACT #	FEE SERVICE #	FJ #	PO #	SEE AT JOB SITE
Shop		60ff				F/A/D
PHONE	EXT.	DATE SCHEDULED	TIME SCHEDULED			SERVICEMAN ASSIGNED
		7/02/	am/pm			

MATERIAL RECORD

QUANTITY ISSUED	QUANTITY B/O	FCI NO	DESCRIPTION	UNIT PRICE	PER	TOTAL AMOUNT
			PREVENTIVE MAINTENANCE CONTRACT			

CHECK APPROPRIATE BOX

- ☐ O.C
- ☐ I & T
- ☐ FEE CALL
- ☐ DELIVERY
- ☐ DEMO
- ☑ EMERGENCY CALL
- ☐ CONTRACT CALL
- ☐ PICK UP
- ☐ DEMO OWNER
- ☐ SURVEY

DEPARTED SHOP	TIME IN	TIME OUT	RETURNED SHOP	TOTAL HOURS	START MILEAGE	END MILEAGE	MISC EXPENSE	CAR FARE
8 am	9 am	3:30 pm	4:30 pm					

☐ MAT REQD ☐ PARTIAL
☐ OTHER ☐ LABOR REQD

SERVICE DATE: 7/02/01

CUSTOMER SIGNATURE: [signature]

I & T COMPLETE ☐ CALL COMPLETE ☐

WILL RETURN ON:

SERVICEMAN SIGNATURE: [signature]

PROBLEM—AS DESCRIBED — Trouble call —

SERVICE PERFORMED Assisted technician Jimmy. For more information see report #

System Operational

WORK REMAINING

AUTHORIZATION FOR FIRE ALARM INTERRUPTION

The undersigned has been advised by Fire Service, Inc. representative that it may be necessary to interrupt the fire protection service by disconnecting this system and/or a component in the performance of their assigned work.

The undersigned hereby assumes the responsibility for the notification of the authorities of the time the interruption is initiated and said time of the anticipated duration necessary during the period of interruption and hold harmless the Service Inc. and its employees regarding interruption of the [illegible] of the equipment.

FIRE SERVICE INCORPORATED

97625

SUBSIDIARY OF FIRE[illegible]M INC.

39-27 FIFTY NINTH STREET
WOODSIDE, NEW YORK 11377
(718)899-2311

REPORT OF FIELD SERVICE

INVOICE TO

SERVICED 7WTC
New York, N.Y.

CALL AUTHORIZED BY		CONTRACT # Scott8	FEE SERVICE #	FJ #	PO #	SEE AT JOB SITE F.S.D.
PHONE	EXT	DATE SCHEDULED 06-27-2001	TIME SCHEDULED PM.			SERVICEMAN ASSIGNED Frank L.

MATERIAL RECORD

QUANTITY ISSUED	QUANTITY B/O	FCI NO	DESCRIPTION	UNIT PRICE	PER	TOTAL AMOUNT
			PREVENTIVE MAINTENANCE CONTRACT			

CHECK APPROPRIATE BOX

- ☐ Q.C
- ☐ I & T
- ☐ FEE CALL
- ☐ DELIVERY
- ☐ DEMO
- ☐ EMERGENCY CALL
- ☑ CONTRACT CALL
- ☐ PICK UP
- ☐ DEMO OWNER
- ☐ SURVEY

DEPARTED SHOP	TIME IN	TIME OUT	RETURNED SHOP	TOTAL HOURS	START MILEAGE	END MILEAGE	MISC EXPENSE	CAR FARE
	5:00 AM.	1:30 PM.						

- ☐ MAT REQD ☐ PARTIAL
- ☐ OTHER ☐ LABOR REQD

I & T COMPLETE ☐ CALL COMPLETE ☐

SERVICE DATE 06-27-2001
WILL RETURN ON

CUSTOMER SIGNATURE Sean O'Keefe

SERVICEMAN SIGNATURE Frank L.

AUTHORIZATION FOR FIRE ALARM INTERRUPTION

The undersigned has been advised by Fire Service, Inc. representative that it may be necessary to interrupt the fire protection service by disconnecting the system and/or a component in the performance of their assigned task.

The undersigned hereby assumes the responsibility for the notification of the authorities at the time the interruption is initiated and will take all of the precautions deemed necessary during the period of interruption and hold harmless Fire Service Inc. and its employees regarding interruption of fire protection service during their service of the equipment.

Date

PROBLEM—AS DESCRIBED

Service Contract

SERVICE PERFORMED

Assisting Jerry Tyler, the Technician for the Service Contract.

WORK REMAINING

FIRE SERVICE INCORPORATED

97623

SUBSIDIARY OF FIRECOM INC.

39-27 FIFTY NINTH STREET
WOODSIDE, NEW YORK 11377
(718) 899-2311

REPORT OF FIELD SERVICE

INVOICE TO

SERVICED
7WTC
New York, NY.

CALL AUTHORIZED BY		CONTRACT #	FEE SERVICE #	FJ #	P O #	SEE AT JOB SITE
		SC00818				F.S.D.
PHONE	EXT.	DATE SCHEDULED	TIME SCHEDULED			SERVICEMAN ASSIGNED
		06-26-2001	AM.			Frank L.

MATERIAL RECORD

QUANTITY ISSUED	QUANTITY B/O	F C I NO	DESCRIPTION	UNIT PRICE	PER	TOTAL AMOUNT
			PREVENTIVE MAINTENANCE CONTRACT			

CHECK APPROPRIATE BOX

- ☐ Q.C
- ☐ I & T
- ☐ FEE CALL
- ☐ DELIVERY
- ☐ DEMO
- ☐ EMERGENCY CALL
- ☑ CONTRACT CALL
- ☐ PICK UP
- ☐ DEMO OWNER
- ☐ SURVEY

DEPARTED SHOP	TIME IN	TIME OUT	RETURNED SHOP	TOTAL HOURS	START MILEAGE	END MILEAGE	MISC EXPENSE	CAR FARE
	8:00 A.M.	4:30 P.M.						

- ☐ MAT REQD ☐ PARTIAL
- ☐ OTHER ☐ LABOR REQD

I & T COMPLETE ☐ CALL COMPLETE ☐

SERVICE DATE: 06-26-2001

WILL RETURN ON:

CUSTOMER SIGNATURE: Sean O'Keefe

SERVICEMAN SIGNATURE: Frank L.

AUTHORIZATION FOR FIRE ALARM INTERRUPTION

The undersigned has been advised by Fire Service, Inc. representative that it may be necessary to interrupt the fire protection service by disconnecting the system and/or a component in the performance of their assigned work.

The undersigned hereby assumes the responsibility for the notification of the authorities at the time the interruption is initiated and will take all of the precautions deemed necessary during the period of interruption and hold harmless Fire Service Inc. and its employees regarding interruption of the protection service during their service of the equipment.

Date

X

Name

PROBLEM—AS DESCRIBED

Service Contract

SERVICE PERFORMED

Preventive Maintenance Service per the Terms of the Service Contract.

WORK REMAINING

FCI 155

FIRE SERVICE INCORPORATED

97624

SUBSIDIARY OF FIR[illegible]M INC.

39-27 FIFTY NINTH STREET
WOODSIDE, NEW YORK 11377
(718) 899-2311

REPORT OF FIELD SERVICE

INVOICE TO

SERVICED

7 W T C
New York, N.Y.

CALL AUTHORIZED BY	CONTRACT #	FEE SERVICE #	FJ #	P O #	SEE AT JOB SITE
	S00818				F. S. J.

PHONE	EXT	DATE SCHEDULED	TIME SCHEDULED	SERVICEMAN ASSIGNED
		06-25-2001	P.M.	Frank L.

MATERIAL RECORD

QUANTITY ISSUED	QUANTITY B/O	F C I NO	DESCRIPTION	UNIT PRICE	PER	TOTAL AMOUNT
			PREVENTIVE MAINTENANCE CONTRACT			

AUTHORIZATION FOR FIRE ALARM INTERRUPTION

The undersigned has been advised by Fire Service Inc. representative that it may be necessary to interrupt the fire protection service by disconnecting the system and/or a component in the performance of their assigned work.

The undersigned hereby assumes the responsibility for the notification of the authorities at the time the interruption is initiated and will take all of the precautions deemed necessary during the period of interruption and hold harmless Fire Service Inc. and its employees regarding interruption of the protection service during their service of the equipment.

Date

Name

CHECK APPROPRIATE BOX

- ☐ O. C
- ☐ I & T
- ☐ FEE CALL
- ☐ DELIVERY
- ☐ DEMO
- ☐ EMERGENCY CALL
- ☑ CONTRACT CALL
- ☐ PICK UP
- ☐ DEMO OWNER
- ☐ SURVEY

DEPARTED SHOP	TIME IN	TIME OUT	RETURNED SHOP	TOTAL HOURS	START MILEAGE	END MILEAGE	MISC EXPENSE	CAR FARE
8:00 A.M.	9:00 A.M.	3:30 P.M.	4:30 P.M.					

- ☐ MAT RECD
- ☐ PARTIAL
- ☐ OTHER
- ☐ LABOR RECD

I & T COMPLETE ☐ CALL COMPLETE ☐

SERVICE DATE: 06-25-2001

WILL RETURN ON:

CUSTOMER SIGNATURE: Sean O'Keeffe

SERVICEMAN SIGNATURE: Frank L.

PROBLEM—AS DESCRIBED

Service Contract

SERVICE PERFORMED

Assisting Raphael Yadgarov with the installation of the New LD-40 Qued Printer, on 44th floor Security Office Qued Downloading the Software at the F.C.S. Qued also Assisting Vinny Turo Moving the Panels Down 44th Floor South To 44th Floor.

WORK REMAINING

FCI 155
REV 8/86

FIRE SERVICE INCORPORATED

97617

SUBSIDIARY OF FIRECOM INC.
39-27 FIFTY NINTH STREET
WOODSIDE, NEW YORK 11377
(718)899-2311

REPORT OF FIELD SERVICE

INVOICE TO

SERVICED
7WTC
New York, N.Y.

CALL AUTHORIZED BY	CONTRACT #	FEE SERVICE #	FJ #	PO #	SEE AT JOB SITE
	SC00818				F.S.D.

PHONE	EXT	DATE SCHEDULED	TIME SCHEDULED	SERVICEMAN ASSIGNED
		06-20-2001	A.M.	Frank L.

MATERIAL RECORD

QUANTITY ISSUED	QUANTITY B/O	FCI NO	DESCRIPTION	UNIT PRICE	PER	TOTAL AMOUNT
			PREVENTIVE MAINTENANCE CONTRACT			

CHECK APPROPRIATE BOX

- ☐ Q.C
- ☐ I & T
- ☐ FEE CALL
- ☐ DELIVERY
- ☐ DEMO
- ☐ EMERGENCY CALL
- ☑ CONTRACT CALL
- ☐ PICK UP
- ☐ DEMO OWNER
- ☐ SURVEY

DEPARTED SHOP	TIME IN	TIME OUT	RETURNED SHOP	TOTAL HOURS	START MILEAGE	END MILEAGE	MISC EXPENSE	CAR FARE
	8:00 AM	4:30 PM.						

- ☐ MAT RECD
- ☐ PARTIAL
- ☐ OTHER
- ☐ LABOR RECD

I & T COMPLETE ☐ CALL COMPLETE ☐

SERVICE DATE: 06-20-2001
WILL RETURN ON:

CUSTOMER SIGNATURE: Sean O'Keeffe
SERVICEMAN SIGNATURE: Frank L.

PROBLEM—AS DESCRIBED

Service Contract

SERVICE PERFORMED

Assisting Time Keeper On
The Beginning Of The Service
Call Up!

WORK REMAINING

AUTHORIZATION FOR FIRE ALARM INTERRUPTION

The undersigned has been advised by Fire Service, Inc. representative that it may be necessary to interrupt the fire protection service by disconnecting the system and/or a component in the performance of their assigned work.

The undersigned hereby assumes the responsibility for the notification of the authorities at the time the interruption is initiated and will take all of the precautions deemed necessary during the period of interruption and hold harmless Fire Service Inc. and its employees regarding interruption of fire protection service during the service of the equipment.

Date

Name

X

FCI 155
REV 81/86

FIRE SERVICE INCORPORATED

: 23496

Subsidiary of Firecom, Inc.
39-27 Fifty Ninth Street
Woodside, New York 11377
(718) 899-2311

REPORT OF FIELD SERVICE

LOCATIONS			DEVICES				
FLOOR				W/STA	SPK	STRB	M/STA
34	TENANT SPACE			✓	✓	✓	ACTIV.
						BATTERIES	
33	TENANT SPACE			✓	✓	✓	ACTIV.
						(1) LIGHT OUT	
32	TENANT SPACE.			✓	✓	✓	ACTIV.
31	TENANT SPACE.			✓	✓	✓	ACTIV.
						(1) LIGHT OUT	
30	TENANT SPACE.			✓	✓	✓	ACTIV.
29	TENANT SPACE.			✓	✓	✓	ACTIV.
28	TENANT SPACE.			✓	✓	✓	ACTIV.
27	TENANT SPACE.			✓	✓	✓	ACTIV.
26	TENANT SPACE.			✓	✓	✓	ACTIV.
34	CONF. B	STROBE PWR (101) - TYCO.					
	REPAIRED	REPLACED (2) 12 VLT BATTERIES					

INVOICE TO: 7 W.T.C. Silverstein Prop's N.Y.C (Sharon Barney)

SERVICEMAN ASSIGNED	SEE AT JOB SITE
J. Torres / F. Rosario	F.S.I.
CONTRACT #	DATE SCHEDULED
S/C 00 818	6-20-01
FEE SERVICE #	TYPE OF SYSTEM
	LSN 2000
CALL AUHTORIZED BY	P.O. #
	PHONE / EXT

☒ MAINTENANCE ☐ TEST
☐ JOB COMPLETE ☐ JOB INCOMPLETE
☐ SYSTEM ON LINE ☐ SYSTEM OFF LINE

DEPARTED SHOP	TIME IN	TIME OUT	RETURNED SHOP	TOTAL HOURS
AM PM	800 AM PM	430 AM PM	AM PM	

AUTHORIZATION FOR FIRE ALARM INTERRUPTION
The undersigned has been advised by Fire Service Inc. representative that it may be necessary to interrupt the fire protection service by disconnecting the system and/or a components as the performance of their assigned work.
The undersigned hereby assumes the responsibility for the notification of the authorities at the time the subscription is initiated, and will take all of the precautions deemed necessary during the period of interruption and hold harmless Fire Service Inc. and its employees regarding interruption of the protection service during the service of the equipment.

TIME / DATE / NAME

MATERIAL RECORD

QUANTITY	DESCRIPTION	COST
	PREVENTIVE MAINTENANCE CONTRACT	

CUSTOMER NAME (PRINT) Sean O'Keefe
CUSTOMER SIGNATURE
SERVICEMAN SIGNATURE

SERVICE PERFORMED & REMAINING: Service Contract - Check/Test/ As per BU Access/ Tenant Audio/Communication/ Speakers/ Page & Strobes Lights - W/Stations. - On Floor's (Above Listed). - System Ack/ Reset.

(#) NOTE: to Repair (1) Strobe Light on 33rd Fl. by Hailey. - 31st Fl (1) Strobe Unit to repair by File Room. - To follow up. -

(A) INACCESSIBLE (B) MISSING (C) DEFECTIVE (D) OTHER

FIRE SERVICE INCORPORATED

97619

SUBSIDIARY OF FIRECOM INC.

39-27 FIFTY NINTH STREET
WOODSIDE, NEW YORK 11377
(718) 899-2311

REPORT OF FIELD SERVICE

INVOICE TO

SERVICED

TWTC
New York, N.Y.

CALL AUTHORIZED BY	CONTRACT #	FEE SERVICE #	FJ #	P O #	SEE AT JOB SITE
	Sep818				F.S.D.

PHONE	EXT.	DATE SCHEDULED	TIME SCHEDULED	SERVICEMAN ASSIGNED
		06-19-2001	A.M.	Frank L.

MATERIAL RECORD

QUANTITY ISSUED	QUANTITY B/O	FCI NO	DESCRIPTION	UNIT PRICE	PER	TOTAL AMOUNT
			PREVENTIVE MAINTENANCE CONTRACT			

CHECK APPROPRIATE BOX

- ☐ Q.C
- ☐ I & T
- ☐ FEE CALL
- ☐ DELIVERY
- ☐ DEMO
- ☐ EMERGENCY CALL
- ☑ CONTRACT CALL
- ☐ PICK UP
- ☐ DEMO OWNER
- ☐ SURVEY

DEPARTED SHOP	TIME IN	TIME OUT	RETURNED SHOP	TOTAL HOURS	START MILEAGE	END MILEAGE	MISC EXPENSE	CAR FARE
	8:00 A.M.	4:30 P.M.						

- ☐ MAT RECD
- ☐ PARTIAL
- ☐ OTHER
- ☐ LABOR RECD
- I & T COMPLETE ☐
- CALL COMPLETE ☐

SERVICE DATE: 06-19-2001

WILL RETURN ON:

CUSTOMER SIGNATURE: Sean O'Keeffe

SERVICEMAN SIGNATURE: Frank L.

AUTHORIZATION FOR FIRE ALARM INTERRUPTION

The undersigned has been advised by Fire Service, Inc. representative that it may be necessary to interrupt the fire protection service by disconnecting the system and/or a component on the performance of their assigned work.

The undersigned hereby assumes the responsibility for the notification of the authorities at the time the interruption is initiated and will take all of the precautions deemed necessary during the period of interruption and hold harmless Fire Service Inc. and its employees regarding interruption of the protection service during their service of the equipment.

Date

Name

PROBLEM—AS DESCRIBED

Service Contract

SERVICE PERFORMED

Assisting Driver Tessa Dec. the Hot Working of the Service Contract.

WORK REMAINING

FCI 155

FIRE SERVICE INCORPORATED

23495

Subsidiary of Firecom, Inc.
39-27 Fifty Ninth Street
Woodside, New York 11377
(718) 899-2311

REPORT OF FIELD SERVICE

LOCATIONS		DEVICES			
FLOOR		W/STA	SPKR	STROBE	H/STA ACTIV.
48	PLANT	✓	✓	✓= Rep.	✓
47	TENANT SPACE	✓	✓	✓-Out	✓
46	TENANT SPACE	X	✓	✓-½ Out	✓
45	TENANT SPACE	X	✓	✓	✓
44	TENANT SPACE	✓	✓	✓	✓
43	TENANT SPACE	✓	✓	✓	✓
42	TENANT SPACE	✓	✓	✓	✓
41	TENANT SPACE	✓	✓	✓	✓
40	TENANT SPACE	✓	✓	✓	✓
39	TENANT SPACE	✓	✓ Out 'B' Stair	✓ Out	✓
38	TENANT SPACE	✓	✓	✓	✓
37	TENANT SPACE	✓	✓	✓	✓
36	TENANT SPACE	✓	✓	✓	✓
35	TENANT SPACE	✓	✓	✓	✓

INVOICE TO: T.W.T.C.
SILVERSTEIN. PROP.
N.Y.C.
(SO/Knew Sil. Board Tenant)

SERVICEMAN ASSIGNED: J. TOMEI ~~F. PISCATELLO~~
SEE AT JOB SITE: F.S.D.
DATE SCHEDULED: 6-19-01
CONTRACT #: SC 00818
TYPE OF SYSTEM: LSN 2000
FEE SERVICE #:
P.O. #:
CALL AUHTORIZED BY:
PHONE:
EXT:

☒ MAINTENANCE ☒ TEST
☐ JOB COMPLETE ☐ JOB INCOMPLETE
☐ SYSTEM ON LINE ☐ SYSTEM OFF LINE

DEPARTED SHOP	TIME IN	TIME OUT	RETURNED SHOP	TOTAL HOURS
800 AM/PM	900 AM/PM	420 AM/PM	AM/PM	

AUTHORIZATION FOR FIRE ALARM INTERRUPTION
The undersigned has been advised by Fire Service Inc. representative that it may be necessary to interrupt the fire protection service by disconnecting the system and/or a component in the performance of the assigned work.
The undersigned hereby assumes the responsibility for the notification of the authorities at the time the interruption is initiated and will take all of the precautions deemed necessary during the period of interruption and hold harmless Fire Service Inc. and its employees regarding interruption of the protection service during their service of the equipment.

TIME / DATE / NAME

MATERIAL RECORD

QUANTITY	DESCRIPTION	COST
	PREVENTIVE MAINTENANCE CONTRACT	

CUSTOMER NAME (PRINT): Sean O'Keeffe.
CUSTOMER SIGNATURE:
SERVICEMAN SIGNATURE: J. Tomei

SERVICE PERFORMED & REMAINING: SERVICE CONTRACT - AS PER BLDG ACCESS / TENANT PROCEEDED TO CHECK / TESTING OF: WARDEN'S STATIONS - SPEAKERS PAGE AUDIO / COMMUNICATIONS AND STROBE LIGHT ACTIVATION ON FLOOR'S - AS LISTED ABOVE SYSTEM ACKNOWLEDGED - / ATTENTION / RESET'S. -

(*) NOTE: TO REPAIR IN FOLLOW UP ON FLOOR'S 48' STROBE PWL OPERATE - 47'FL (1) SPK OUT / STROBE 46' FL. STROBES LIGHT CKT (A) OUT. - 39'FL SPK OUT 'B' STAIR AREA / STROBE ACTIV. - OUT. -

(A) INACCESSIBLE (B) MISSING (C) DEFECTIVE (D) OTHER

FIRE SERVICE INCORPORATED

97615

SUBSIDIARY OF FIREDOM INC.

39-27 FIFTY NINTH STREET
WOODSIDE, NEW YORK 11377
(718) 899-2311

REPORT OF FIELD SERVICE

INVOICE TO

SERVICED

TWT
New York, N.Y.

CALL AUTHORIZED BY	CONTRACT #	FEE SERVICE #	FJ #	P.O. #	SEE AT JOB SITE
	S000818				F.S.D.
PHONE / **EXT**	**DATE SCHEDULED**	**TIME SCHEDULED**			**SERVICEMAN ASSIGNED**
	06-13-2001	8 A.M.			Frank

MATERIAL RECORD

QUANTITY ISSUED	QUANTITY B/O	FC I NO	DESCRIPTION	UNIT PRICE	PER	TOTAL AMOUNT
			PREVENTIVE MAINTENANCE CONTRACT			

CHECK APPROPRIATE BOX

- ☐ Q.C
- ☐ I & T
- ☐ FEE CALL
- ☐ DELIVERY
- ☐ DEMO
- ☐ EMERGENCY CALL
- ☑ CONTRACT CALL
- ☐ PICK UP
- ☐ DEMO OWNER
- ☐ SURVEY

DEPARTED SHOP	TIME IN	TIME OUT	RETURNED SHOP	TOTAL HOURS	START MILEAGE	END MILEAGE	MISC EXPENSE	CAR FARE
	8:00 A.M.	4:30 P.M.						

- ☐ MAT REQD
- ☐ PARTIAL
- ☐ OTHER
- ☐ LABOR REQD

I & T COMPLETE ☐ CALL COMPLETE ☐

SERVICE DATE: 06-13-2001

WILL RETURN ON:

CUSTOMER SIGNATURE:

SERVICEMAN SIGNATURE: Frank L.

PROBLEM—AS DESCRIBED

Service Contract

SERVICE PERFORMED

Performing Preventive Maintenance Per The Terms Of The Service Contract

WORK REMAINING

AUTHORIZATION FOR FIRE ALARM INTERRUPTION

The undersigned has been advised by Fire Service, Inc. representative that it may be necessary to interrupt the fire protection service by disconnecting the system and/or a component in the performance of their assigned work.

The undersigned hereby assumes the responsibility for the notification of the authorities at the time the interruption is initiated and will take all of the precautions deemed necessary during the period of interruption and hold harmless Fire Service Inc. and its employees regarding interruption of the protection service during the service of the equipment.

Date

FIRE SERVICE INCORPORATED

23494

Subsidiary of Firecom, Inc.
39-27 Fifty Ninth Street
Woodside, New York 11377
(718) 899-2311

REPORT OF FIELD SERVICE

LOCATIONS			DEVICES				
FLOOR				CABLE	XMTR	S/D	CLEAN TEST
3rd	WEST	HER		3	006	PEC3T	✓
	WEST	HER		3	006	PEC3T	✓
	SECURITY	CLOSET		3	048	PEC3	✓
	DUCT DET	KITCHEN		3	042	EDWDS	✓
	(SUPPLY	CEILING/PLENUM)					
3rd	W. MER	D/D	FAN	3	040	EDWDS	✓
	W. MER	D/D	FAN	3	040	EDWDS	✓
	W. MER.	D/D	FAN	3	040	EDWDS	✓
	W. MER.	D/D	FAN	3	041	EDWDS	(A)
(A)	(INSTALL	S10) -	UNIT	Replace	OK	N/C	
3rd	CONF.	AREA		1	077	DI-3	✓
	RECEPT.	AREA		1	077	DI-3	✓
	ELEV	LOBBY		3	029	PEC3	✓
2	FAN	ROOM	D/D	1	014	EDWDS	✓
2	ELEV.	LOBBY		3	028	PEC3	✓
2	ELEV.	LOBBY		3	005	PEC3T	✓
1st	PLANT	MER	D/D	3	039	EDWDS	✓
1st	PLANT	MER	D/D	3	037	EDWDS	✓
1st	PLANT	MER	PREM	1	012	PEC3T	✓

PREVENTIVE MAINTENANCE CONTRACT

INVOICE TO: T.W.T.C.
(Solomon Schechter Borough)
N.Y.C.

SERVICEMAN ASSIGNED: J. TORRES / F. ROSARIO
SEE AT JOB SITE: 4.5.0
DATE SCHEDULED: 6-13-01
CONTRACT #: SC 00818
TYPE OF SYSTEM: LSN 2000
FEE SERVICE #:
P.O. #:
CALL AUHTORIZED BY:
PHONE:
EXT:

☒ MAINTENANCE ☒ TEST
☒ JOB COMPLETE ☐ JOB INCOMPLETE
☐ SYSTEM ON LINE ☐ SYSTEM OFF LINE

DEPARTED SHOP	TIME IN	TIME OUT	RETURNED SHOP	TOTAL HOURS
AM PM	8:00 AM PM	4:30 AM PM	AM PM	

MATERIAL RECORD

QUANTITY	DESCRIPTION	COST

CUSTOMER NAME (PRINT): Miguel Rivera
CUSTOMER SIGNATURE:
SERVICEMAN SIGNATURE:

AUTHORIZATION FOR FIRE ALARM INTERRUPTION
The undersigned has been advised by Fire Service Inc. representative that it may be necessary to interrupt the fire protection service by disconnecting the system and/or a component as the performance of their assigned work.
The undersigned hereby assumes the responsibility for the confinement of the alarm is initiated and will take all of the precautions deemed necessary during the period of interruption and hold harmless Fire Service Inc. and its employees regarding interruption of the protection service during their service of the equipment.

TIME
DATE
NAME

SERVICE PERFORMED & REMAINING: As per contract. Test Maintenance on Smoke Detection Class E System in Area Floors 3rd 2nd 1st 1BS (Listed Above). - System Jack Reset Back to Open.
(A) NOTE: W.MER. D/D (041) Unit Replaced Wires - Cold Defective N/C

(A) INACCESSIBLE (B) MISSING (C) DEFECTIVE (D) OTHER

Unit Supplied by Ben.

FIRE SERVICE INCORPORATED

23493

Subsidiary of Firecom, Inc.
39-27 Fifty Ninth Street
Woodside, New York 11377
(718) 899-2311

REPORT OF FIELD SERVICE

LOCATIONS			DEVICES			
FLOOR	AREA'S . CLOSET'S		CABLE	XTNDR	S/D	TST CLEAN
5	PASS ELEV.		1	004	BLK	✓
	FREIGHT		1	004	BLK	✓
	ELECT	A	1	169	BLK	✓
	TELEPH	A	1	169	BLK	✓
	ELECT	B	1	169	BLK	✓
	COMM	B	1	169	BLK	✓
	ELECT	C	1	169	BLK	✓
	ELECT	F	1	169	BLK	✓
	ROTO	CLOSE	AREA	3	013	PEL3T ✓
	ROTO	CLOSE	AREA	3	013	PEL3T ✓
4	ELECT	B		1	167	BLK ✓
	TELEPH	B		1	167	BLK ✓
	COMM	B		1	167	BLK ✓
	TELEPH	A		1	167	BLK ✓
	ELECT	A		1	167	BLK ✓
	ELECT	6		3	050	PEL3 ✓
	MAIN	PASS ELEV.		1	003	BLK ✓
	FREIGHT ELEV.			1	003	BLK ✓
	CHIEF'S OFF. D/D			3	043	EDWDI ✓

INVOICE TO: T.W.T.C.

N.Y.C (Solomon Smith B.)

SERVICEMAN ASSIGNED	SEE AT JOB SITE
J. TOLINO	F.S.I.
F. DORAN	DATE SCHEDULED 6-12-01
CONTRACT # S/C 00 818	TYPE OF SYSTEM LSN 2000
FEE SERVICE #	P.O. #
CALL AUHTORIZED BY	PHONE / EXT

☒ MAINTENANCE ☐ TEST

☐ JOB COMPLETE ☐ JOB INCOMPLETE

☐ SYSTEM ON LINE ☐ SYSTEM OFF LINE

DEPARTED SHOP	TIME IN	TIME OUT	RETURNED SHOP	TOTAL HOURS
AM PM	8:00 AM PM	4:30 AM PM	AM PM	

AUTHORIZATION FOR FIRE ALARM INTERRUPTION
The undersigned has been advised by Fire Service Inc. representative that it may be necessary to interrupt the fire protection service by disconnecting the system and/or a component in the performance of their assigned work.
The undersigned hereby assumes the responsibility for the notification of the authorities at the time the interruption is initiated and will take all of the precautions deemed necessary during the period of interruption and hold harmless Fire Service Inc. and its employees regarding interruption of the protection service during their service of the equipment.

TIME / DATE / NAME

MATERIAL RECORD

QUANTITY	DESCRIPTION	COST
2	ALARM'S LOG'S BOOKS	45 EACH
4	12 VLTS BATTERIES	6.95 EACH
	(STOCK'D PANEL'S)	

PREVENTIVE MAINTENANCE CONTRACT

CUSTOMER NAME (PRINT) Mario Rivera

CUSTOMER SIGNATURE

SERVICEMAN SIGNATURE

SERVICE PERFORMED & REMAINING

S/CONTRACT - S/DETECTORS ON FLOOR'S 5 + 4. - (Solomon Brothers/Smith Barney) AREAS - CLOSET'S AS LISTED. - UNITS TESTED/CLEANED. - SYSTEM ACK/RESETED. -

(*) ALSO DELIVERED (2) ALARM'S LOG'S BOOK'S AS REQUESTED F.J.D./RLD. -

& (4) BATTERIES TO BE REPLACED AT STOCKED PANEL'S (BACK UP PWR). -

(A) INACCESSIBLE (B) MISSING (C) DEFECTIVE (D) OTHER

FIRE SERVICE INCORPORATED

97668

SUBSIDIARY OF FIRECOM INC.

39-27 FIFTY NINTH STREET
WOODSIDE, NEW YORK 11377
(718) 899-2311

REPORT OF FIELD SERVICE

INVOICE TO

SERVICED

TWTC
New York, N.Y.

CALL AUTHORIZED BY	CONTRACT #	FEE SERVICE #	FJ #	PO #	SEE AT JOB SITE
	S000818				F.S.I.

PHONE	EXT	DATE SCHEDULED	TIME SCHEDULED	SERVICEMAN ASSIGNED
		06-13-2001	P.M.	Frank R

MATERIAL RECORD

QUANTITY ISSUED	QUANTITY B/O	F C I NO	DESCRIPTION	UNIT PRICE	PER	TOTAL AMOUNT

PREVENTIVE MAINTENANCE CONTRACT

CHECK APPROPRIATE BOX

- ☐ Q. C
- ☐ I & T
- ☐ FEE CALL
- ☐ DELIVERY
- ☐ DEMO
- ☐ EMERGENCY CALL
- ☑ CONTRACT CALL
- ☐ PICK UP
- ☐ DEMO OWNER
- ☐ SURVEY

DEPARTED SHOP	TIME IN	TIME OUT	RETURNED SHOP	TOTAL HOURS	START MILEAGE	END MILEAGE	MISC EXPENSE	CAR FARE
	8:00 AM.	4:00 P.M.						

- ☐ MAT RECD
- ☐ PARTIAL
- ☐ OTHER
- ☐ LABOR RECD

I & T COMPLETE ☐ CALL COMPLETE ☐

SERVICE DATE: 06-13-2001

WILL RETURN ON

CUSTOMER SIGNATURE

SERVICEMAN SIGNATURE: Frank R

AUTHORIZATION FOR FIRE ALARM INTERRUPTION

The undersigned has been advised by Fire Service, Inc. representative that it may be necessary to interrupt the fire protection service by disconnecting the system and/or a component in the performance of their assigned work.

The undersigned hereby assumes the responsibility for the notification of the authorities at the time the interruption is initiated and will take all of the precautions deemed necessary during the period of interruption and hold harmless Fire Service Inc. and its employees regarding interruption of the protection service during their service of the equipment.

Date

Name

PROBLEM—AS DESCRIBED

Service Contract

SERVICE PERFORMED

Assisting Tenant Fire Dept. Personnel At The Service Contract Also Replacing Batteries and Alarm Board for TWTC.

WORK REMAINING

FCI 155
REV 6186

FIRE SERVICE INCORPORATED

23492

Subsidiary of Firecom, Inc.
39-27 Fifty Ninth Street
Woodside, New York 11377
(718) 899-2311

REPORT OF FIELD SERVICE

LOCATIONS			DEVICES				
FLOOR	AREA			CABLE	ZONE	S/D	TST CLEAN
26	ELECT	A		2	178	BLK	✓
	COMM	A		2	178	BLK	✓
	TELEPH	A		2	178	BLK	✓
	COMM	B		2	178	BLK	✓
	ELECT	B		2	178	BLK	✓
	TELEPH	B		2	178	BLK	✓
	PASS ELEV.		(003)	2	003	BLK	✓
	COMM	C		2	175	BLK	✓
	ELECT	C		2	175	BLK	✓
	TELEPH	C		2	175	BLK	✓
	ELECT	D		2	175	BLK	✓
	COMM	D		2	175	BLK	✓
	TELEPH	D		2	175	BLK	✓
	FREIGHT ELEV.		(003)	2	003	BLK	✓
	CORE HER D/D.			2	235	SIF24	✓
	CORE HER D/D.			2	235	SIF24	✓
	RETURN D/D NORTH			2	234	SIF24	✓
	RETURN D/D SOUTH			2	234	SIF24	✓
26	RET. D/D LADIES RM		NO ACCESS. -				
	BLD TO DOOR BY FUTURE. - NEXT. -						
44	PREACTION PNL/TROUBLE - TERMINATION AT						
	TIB (44"FA) LIFTED - WIRES CUT DUE TO MULTIPLE						
	TROUBLE/ALM'S - SUB CONTRACTOR TO CLEAR SUB SYST.						
	PREACTION PNL. - REPAIRED -						
	- TO RESTORE WIRED SUPV. - WHEN COMPLETE -						

INVOICE TO: J.W.T.C.

N.Y.C.

SERVICEMAN ASSIGNED	SEE AT JOB SITE
J. Torres	F.S.D.
F. Fossatio	DATE SCHEDULED 6-6-01
CONTRACT # S/C 00 818	TYPE OF SYSTEM LSN 2000
FEE SERVICE #	PO #
CALL AUHTORIZED BY	PHONE / EXT

☑ MAINTENANCE ☐ TEST

☐ JOB COMPLETE ☐ JOB INCOMPLETE

☐ SYSTEM ON LINE ☐ SYSTEM OFF LINE

DEPARTED SHOP	TIME IN	TIME OUT	RETURNED SHOP	TOTAL HOURS
AM PM	800 AM PM	430 PM	AM PM	

AUTHORIZATION FOR FIRE ALARM INTERRUPTION
The undersigned has been advised by Fire Service Inc. representative that it may be necessary to interrupt the fire protection service by disconnecting the system and/or a component in the performance of their assigned work.
The undersigned hereby assumes the responsibility for the notification of the authorities at the time the interruption is initiated and will take all of the precautions deemed necessary during the period of interruption and will instruct the Service Inc. and its employees regarding resumption of the protection service during their service of the equipment.

NAME DATE TIME

MATERIAL RECORD

QUANTITY	DESCRIPTION	COST
	PREVENTIVE MAINTENANCE CONTRACT	

CUSTOMER NAME (PRINT)

CUSTOMER SIGNATURE

SERVICEMAN SIGNATURE

SERVICE PERFORMED & REMAINING: SERVICE CONTRACT - PREVENTIVE MAINTENANCE & REPAIRS AS LISTED ABOVE. - SMOKE DETECTOR ALARMS SERVICED ON 26TH. AREA CLOSETS ERASED LOCALLY MAIN F.C. STATION ALARMS ACKNOWLEDGED - RESETS PROPERLY. - SYSTEM BACK IN OPERATION. -

(A) INACCESSIBLE (B) MISSING (C) DEFECTIVE

FIRE SERVICE INCORPORATED

97667

SUBSIDIARY OF FIRECOM INC.

39-27 FIFTY NINTH STREET
WOODSIDE, NEW YORK 11377
(718) 899-2311

REPORT OF FIELD SERVICE

INVOICE TO

SERVICED
TWTC
New York, N.Y.

CALL AUTHORIZED BY	CONTRACT #	FEE SERVICE #	FJ #	P O #	SEE AT JOB SITE
	C-00818				F.S.I.

PHONE	EXT	DATE SCHEDULED	TIME SCHEDULED	SERVICEMAN ASSIGNED
		06-04-2001	A.M.	Frank L.

MATERIAL RECORD

QUANTITY ISSUED	QUANTITY B/O	FCI NO	DESCRIPTION	UNIT PRICE	PER	TOTAL AMOUNT
			PREVENTIVE MAINTENANCE CONTRACT			

CHECK APPROPRIATE BOX

- ☐ G.C
- ☐ I & T
- ☐ FEE CALL
- ☐ DELIVERY
- ☐ DEMO
- ☐ EMERGENCY CALL
- ☒ CONTRACT CALL
- ☐ PICK UP
- ☐ DEMO OWNER
- ☐ SURVEY

DEPARTED SHOP	TIME IN	TIME OUT	RETURNED SHOP	TOTAL HOURS	START MILEAGE	END MILEAGE	MISC EXPENSE	CAR FARE
	8:00 AM	4:30 PM						

- ☐ MAT REQD
- ☐ PARTIAL
- ☐ OTHER
- ☐ LABOR REQD

I & T COMPLETE ☐ CALL COMPLETE ☐

SERVICE DATE: 06-06-2001
WILL RETURN ON:

CUSTOMER SIGNATURE: James Capuzzo
SERVICEMAN SIGNATURE: Frank L.

AUTHORIZATION FOR FIRE ALARM INTERRUPTION

The undersigned has been advised by Fire Service, Inc. representative that it may be necessary to interrupt the fire protection service by disconnecting the system and/or a components in the performance of their assigned work.

The undersigned hereby assumes the responsibility for the notification of the authorities at the time the interruption is initiated and will take all of the precautions deemed necessary during the period of interruption and hold harmless Fire Service Inc. and its employees regarding interruption of the protection service during their service of the equipment.

Date

Name

PROBLEM—AS DESCRIBED

Service Contract

SERVICE PERFORMED

Assisting Technician in the performing of the Service Contract.

WORK REMAINING

FCI 155
REV 6186

FIRE SERVICE INCORPORATED

97666

SUBSIDIARY OF FI[illegible]COM INC.
39-27 FIFTY NINTH STREET
WOODSIDE, NEW YORK 11377
(718) 899-2311

REPORT OF FIELD SERVICE

INVOICE TO

SERVICED
7 WTC
New York, N.Y.

CALL AUTHORIZED BY	CONTRACT #	FEE SERVICE #	FJ #	P O #	SEE AT JOB SITE
	SC00818				F.S.D.
PHONE / EXT	DATE SCHEDULED	TIME SCHEDULED			SERVICEMAN ASSIGNED
	06-04-2001	A.M.			Frank L.

MATERIAL RECORD

QUANTITY ISSUED	QUANTITY B/O	FCI NO	DESCRIPTION	UNIT PRICE	PER	TOTAL AMOUNT
			PREVENTIVE MAINTENANCE CONTRACT			

CHECK APPROPRIATE BOX

- ☐ O.C
- ☐ I & T
- ☐ FEE CALL
- ☐ DELIVERY
- ☐ DEMO
- ☐ EMERGENCY CALL
- ☑ CONTRACT CALL
- ☐ PICK UP
- ☐ DEMO OWNER
- ☐ SURVEY

DEPARTED SHOP	TIME IN	TIME OUT	RETURNED SHOP	TOTAL HOURS	START MILEAGE	END MILEAGE	MISC EXPENSE	CAR FARE
8:00 A.M.	9:00 AM	2:30 P.M.	4:30 P.M.					

- ☐ MAT REQD
- ☐ PARTIAL
- ☐ OTHER
- ☐ LABOR REQD

I & T COMPLETE ☐ CALL COMPLETE ☐

SERVICE DATE: 06-04-2001

WILL RETURN ON

CUSTOMER SIGNATURE: James Cayglan

SERVICEMAN SIGNATURE: Frank L.

AUTHORIZATION FOR FIRE ALARM INTERRUPTION

The undersigned has been advised by Fire Service, Inc. representative that it may be necessary to interrupt the fire protection service by disconnecting the system and/or a component on the performance of their assigned work.

The undersigned hereby assumes the responsibility for the notification of the authorities at the time the interruption is initiated and will take all of the precautions deemed necessary during the period of interruption and hold harmless Fire Service Inc. and its employees regarding interruption of the protection service during their service of the equipment.

Date

Name

PROBLEM—AS DESCRIBED

Service Contract

SERVICE PERFORMED

Assisting Jerry Torres Dec.
Performing PM Service
Contract.

WORK REMAINING

FCI 155
REV 6/88

FIRE SERVICE INCORPORATED

84035

SUBSIDIARY OF F /M INC.
39-27 FIFTY NINTH STREET
WOODSIDE, NEW YORK 11377
(718) 899-2311

REPORT OF FIELD SERVICE

INVOICE TO

SERVICED

7WTC.
Emergency Service.

SUNDAY

CALL AUTHORIZED BY	CONTRACT #	FEE SERVICE #	FJ #	PO #	SEE AT JOB SITE
Service.	SE 818				FSD- Angel
PHONE / **EXT**	**DATE SCHEDULED**	**TIME SCHEDULED**			**SERVICEMAN ASSIGNED**
	22 April 2001				Newell

MATERIAL RECORD

QUANTITY ISSUED	QUANTITY B/O	FCI NO	DESCRIPTION	UNIT PRICE	PER	TOTAL AMOUNT
			CONTRACT TROUBLE CALL			

CHECK APPROPRIATE BOX

- ☐ O. C
- ☐ I & T
- ☐ FEE CALL
- ☐ DELIVERY
- ☐ DEMO
- ☐ EMERGENCY CALL
- ☐ CONTRACT CALL
- ☐ PICK UP
- ☐ DEMO OWNER
- ☐ SURVEY

DEPARTED SHOP	TIME IN	TIME OUT	RETURNED SHOP	TOTAL HOURS	START MILEAGE	END MILEAGE	MISC EXPENSE	CAR FARE
930	1045	1100	1200	4.00				

- ☐ MAT REQD ☐ PARTIAL
- ☐ OTHER ☐ LABOR REQD

I & T COMPLETE ☐ CALL COMPLETE ☐

SERVICE DATE: 22 Apr. 12001

WILL RETURN ON:

CUSTOMER SIGNATURE: x R. Mercado

SERVICEMAN SIGNATURE: R. C Newell

AUTHORIZATION FOR FIRE ALARM INTERRUPTION

The undersigned has been advised by Fire Service Inc. representative that it may be necessary to interrupt the fire protection service by disconnecting the system and/or a component in the performance of their assigned work.

The undersigned hereby assumes the responsibility for the notification of the authorities at the time the interruption is initiated and will take all of the precautions deemed necessary during the period of interruption and hold harmless Fire Service Inc. and its employees regarding interruption of the protection service during their service of the equipment.

Date

Name

PROBLEM—AS DESCRIBED

Emergency Service.

SERVICE PERFORMED 930 dead beep. Contact service and customer. Customer reports FCS like up 8500 Interface, bound trouble. Need service ASAP. 10:45 arrived at jobsite. Met with Security FSD Checked FCS. No Trouble (6) SUPV (0) ASBL. Checked trouble list. 8500 IF # 240 in trouble card sub 10000. Reset 8500 IF - Trouble reset, However F.C.S. display locked up in trouble restart System. Performance checked F.C.S -OK (65) Trouble (6) Supv. Fire ALARM system DACCON LINE CALL Completed.

WORK REMAINING

FCI 155

FIRE SERVICE INCORPORATED

97664

SUBSIDIARY OF FI[illegible]COM INC.

39-27 FIFTY NINTH STREET
WOODSIDE, NEW YORK 11377
(718) 899-2311

REPORT OF FIELD SERVICE

INVOICE TO

SERVICED

7 WTC
New York, N.Y.

CALL AUTHORIZED BY	CONTRACT #	FEE SERVICE #	FJ #	P O #	SEE AT JOB SITE
	Sec0818				FSD
PHONE / **EXT**	**DATE SCHEDULED**	**TIME SCHEDULED**			**SERVICEMAN ASSIGNED**
	05-30-01	A.M.			Frank L.

MATERIAL RECORD

QUANTITY ISSUED	QUANTITY B/O	FCI NO	DESCRIPTION	UNIT PRICE	PER	TOTAL AMOUNT
			PREVENTIVE MAINTENANCE CONTRACT			

CHECK APPROPRIATE BOX

- ☐ O.C
- ☐ I & T
- ☐ FEE CALL
- ☐ DELIVERY
- ☐ DEMO
- ☐ EMERGENCY CALL
- ☑ CONTRACT CALL
- ☐ PICK UP
- ☐ DEMO OWNER
- ☐ SURVEY

DEPARTED SHOP	TIME IN	TIME OUT	RETURNED SHOP	TOTAL HOURS	START MILEAGE	END MILEAGE	MISC EXPENSE	CAR FARE
	8:00 A.M.	4:30 P.M.						

- ☐ MAT REQD
- ☐ PARTIAL
- ☐ OTHER
- ☐ LABOR REQD

I & T COMPLETE ☐ CALL COMPLETE ☐

SERVICE DATE: 05-30-01

WILL RETURN ON:

CUSTOMER SIGNATURE:

SERVICEMAN SIGNATURE: Frank L.

AUTHORIZATION FOR FIRE ALARM INTERRUPTION

The undersigned has been advised by Fire Service, Inc. representative that it may be necessary to interrupt the fire protection service by disconnecting the system and/or a component in the performance of their assigned work.

The undersigned hereby assumes the responsibility for the notification of the authorities at the time the interruption is initiated and will take all of the precautions deemed necessary during the period of interruption and hold harmless Fire Service Inc. and its employees resulting interruption of the protection service during their service of the equipment.

Date

Name

PROBLEM—AS DESCRIBED

Service Contract

SERVICE PERFORMED

Assisting Tony Lopez
Per the Supervisor of the
Service Coordinator.

WORK REMAINING

FCI 155
REV 6186

FIRE SERVICE INCORPORATED

23485

Subsidiary of Firecom, Inc.
39-27 Fifty Ninth Street
Woodside, New York 11377
(718) 899-2311

REPORT OF FIELD SERVICE

LOCATIONS | **DEVICES**

FLOOR				CABLE	XMDR	TEST CLEAN	S/D
29	PASS/FREIGHT		(2)	2	006	✓	BLK
	ELECT	A-B	(2)	2	182	✓	BLK
	TELEPH	A-B	(2)	2	182	✓	BLK
	COMM	A-B	(2)	2	182	✓	BLK
	ELECT	D.W		2	181	✓	BLK
	ELECT	G/SEC	(2)	3	007	✓	PEC3
	ELECT	C-D	(2)	2	181	✓	BLK
	TELEPH	C-D	(2)	2	181	✓	BLK
	COMM	C		2	181	✓	BLK
	ELECT	F					
	SHUTTLE ELEV.			3	030	✓	PEC3
(5)	CORE WER AREA		(3)	2	240	✓	PEC3T
(6)	CORE WER D/D.		(2)	3	000	✓ SIF	SIF24
	W. WER AREA		(2)	3	032	✓	EDWIS
28	PASS/FREIGHT		(2)	2	005	✓	EDWIS
	ELECT	A-B	(2)	2	190	✓	BLK
	COMM	A-B	(2)	2	180	✓	BLK
	TELEPH	A-B	(2)	2	180	✓	BLK
	ELECT	C-D	(2)	2	179	✓	BLK
	COMM	C-D	(2)	2	179	✓	BLK
	TELEPH/COMM	C	(1)	2	179	✓	BLK.
	ELECT	D.W.	(1)	2	179	✓	PEC3
	ELECT	F					
	ELECT	G		2	180	✓	PEC 3
(7)	SECURITY CLOSET	NO	S/D.	—	NO WIRING EXISTING		
	SHUTTLE ELEV.			2	005	✓	PEC3
	CORE WER D/D.			2	239	✓	SIF 24
	CORE WER D/D			2	239	✓	SIF 24
	W. WER AREA		(3)	3	057	✓	PEC3T
	W. WER DIRECT.			3	047	✓	DT-3

PREVENTIVE MAINTENANCE CONTRACT

INVOICE TO: J.W.T.C.

N.Y.C.

Solomon Floor

SERVICEMAN ASSIGNED	SEE AT JOB SITE
J. TORRES / F. PASSALIA	F.S.D.
DATE SCHEDULED	5-22-01
CONTRACT # S/C00818	TYPE OF SYSTEM LSN 2000
FEE SERVICE #	P.O. #
CALL AUHTORIZED BY	PHONE / EXT

☒ MAINTENANCE ☐ TEST

☐ JOB COMPLETE ☐ JOB INCOMPLETE

☐ SYSTEM ON LINE ☐ SYSTEM OFF LINE

DEPARTED SHOP	TIME IN	TIME OUT	RETURNED SHOP	TOTAL HOURS
8:00 AM PM	9:00 AM PM	4:30 AM PM	AM PM	

MATERIAL RECORD

QUANTITY	DESCRIPTION	COST

CUSTOMER NAME (PRINT) SEAN O'KEEFE

CUSTOMER SIGNATURE

SERVICEMAN SIGNATURE

AUTHORIZATION FOR FIRE ALARM INTERRUPTION
The undersigned has been advised by Fire Service Inc. representative that it may be necessary to interrupt the fire protection service by disconnecting the system and/or a component in the performance of their assigned work.
The undersigned hereby assumes the responsibility for the notification of the authorities at the time the interruption is initiated and will take all of the precautions deemed necessary during this period of interruption and hold harmless Fire Service Inc. and its employees regarding interruptions of fire protection service during the course of the equipment.

NAME DATE TIME

SERVICE PERFORMED & REMAINING: SERVICE RUN TEST. CHECK TEST CLEANING DETECTION ON FLOORS 29/28TH FLOORS AREAS ALL AS LISTED. NOTE 29TH FL. CORE WER DUCT DET. (1) UNIT & (1) AREA CEILING NO SAFE ACCESS TO MAINTENANCE/SERVICE DUE TO HIGH VOLTAGE RISER POWER EXPOSED BY UNITS. 28TH FL. (FOUND) SECURITY CLOSET WITH NO S/D. PROTECTION AS PREVIOUS REPORTED. SYSTEM ACK/RESETED BACK TO OPERATING/NORMAL.

(A) INACCESSIBLE (B) MISSING (C) DEFECTIVE (D) OTHER

FIRE SERVICE INCORPORATED

84206

SUBSIDIARY OF FireCOM INC.

39-27 FIFTY NINTH STREET
WOODSIDE, NEW YORK 11377
(718) 899-2311

REPORT OF FIELD SERVICE

INVOICE TO

SERVICED
7 WTC
New York, N.Y.

CALL AUTHORIZED BY		CONTRACT #	FEE SERVICE #	F.J #	P.O #	SEE AT JOB SITE
		SC00818				F.S.D
PHONE	EXT	DATE SCHEDULED	TIME SCHEDULED			SERVICEMAN ASSIGNED
		05-23-2001	D.K.			Frank L.

MATERIAL RECORD

QUANTITY ISSUED	QUANTITY B/O	FCI NO	DESCRIPTION	UNIT PRICE	PER	TOTAL AMOUNT
					PREVENTIVE MAINTENANCE CONTRACT	

CHECK APPROPRIATE BOX

- ☐ Q.C
- ☐ I & T
- ☐ FEE CALL
- ☐ DELIVERY
- ☐ DEMO
- ☐ EMERGENCY CALL
- ☑ CONTRACT CALL
- ☐ PICK UP
- ☐ DEMO OWNER
- ☐ SURVEY

DEPARTED SHOP	TIME IN	TIME OUT	RETURNED SHOP	TOTAL HOURS	START MILEAGE	END MILEAGE	MISC EXPENSE	CAR FARE
	8:00 AM.	4:30 PM.						

- ☐ MAT REQD
- ☐ PARTIAL
- ☐ OTHER
- ☐ LABOR REQD

I & T COMPLETE ☐ CALL COMPLETE ☐

SERVICE DATE: 05-23-2001

WILL RETURN ON:

CUSTOMER SIGNATURE: Sean O'Kee

SERVICEMAN SIGNATURE: Frank L.

AUTHORIZATION FOR FIRE ALARM INTERRUPTION

The undersigned has been advised by Fire Service, Inc. representative that it may be necessary to interrupt the fire protection service by disconnecting the system and/or a component in the performance of their assigned work.

This undersigned hereby assumes the responsibility for the notification of the authorities at the time the interruption is initiated and will take all of the precautions deemed necessary during the period of interruption and hold harmless Fire Service Inc. and its employees regarding interruption of fire protection service during their service of the equipment.

Date

PROBLEM—AS DESCRIBED

Service Contract

SERVICE PERFORMED

Assisting Jimmy Fong on the performing of the Service Contract.

WORK REMAINING

FIRE SERVICE INCORPORATED

84207

SUBSIDIARY OF FI...COM INC.

39-27 FIFTY NINTH STREET
WOODSIDE, NEW YORK 11377
(718) 899-2311

REPORT OF FIELD SERVICE

INVOICE TO

SERVICED

TWTC
New York, N.Y.

CALL AUTHORIZED BY	CONTRACT #	FEE SERVICE #	FJ #	PO #	SEE AT JOB SITE
	SC00818				F.S.D.

PHONE	EXT.	DATE SCHEDULED	TIME SCHEDULED	SERVICEMAN ASSIGNED
		05-22-2001	P.M.	Frank L.

MATERIAL RECORD

QUANTITY ISSUED	QUANTITY B/O	FCI NO	DESCRIPTION	UNIT PRICE	PER	TOTAL AMOUNT
					PREVENTIVE MAINTENANC	
					CONTRACT	

CHECK APPROPRIATE BOX

- ☐ Q.C
- ☐ I & T
- ☐ FEE CALL
- ☐ DELIVERY
- ☐ DEMO
- ☐ EMERGENCY CALL
- ☑ CONTRACT CALL
- ☐ PICK UP
- ☐ DEMO OWNER
- ☐ SURVEY

DEPARTED SHOP	TIME IN	TIME OUT	RETURNED SHOP	TOTAL HOURS	START MILEAGE	END MILEAGE	MISC EXPENSE	CAR FARE
	8:00 AM.	4:30 PM.						

- ☐ MAT REQD
- ☐ PARTIAL
- ☐ OTHER
- ☐ LABOR REQD

I & T COMPLETE ☐ CALL COMPLETE ☐

SERVICE DATE: 05-22-2001

WILL RETURN ON

CUSTOMER SIGNATURE: Sean O'Keaffe

SERVICEMAN SIGNATURE: Frank L.

AUTHORIZATION FOR FIRE ALARM INTERRUPTION

The undersigned has been advised by Fire Service, Inc. Representative that it may be necessary to interrupt the protection service by disconnecting the system and/or a component in the performance of their assigned work.

The undersigned hereby assumes the responsibility for the notification of the authorities of the time the interruption is initiated and restitution of the protection service during their service of the equipment.

Date

Name

PROBLEM—AS DESCRIBED

Service Contract

SERVICE PERFORMED

Completing Fire Alarm Tests Per the Requirements of the Service Contract.

WORK REMAINING

FCI 155
REV 8186

FIRE SERVICE INCORPORATED

97660

SUBSIDIARY OF FI...COM INC.
39-27 FIFTY NINTH STREET
WOODSIDE, NEW YORK 11377
(718) 899-2311

REPORT OF FIELD SERVICE

INVOICE TO

SERVICED
7 W T C
New York, N.Y.

CALL AUTHORIZED BY		CONTRACT #	FEE SERVICE #	FJ #	P O #	SEE AT JOB SITE
		200818				F.S.D.
PHONE	EXT	DATE SCHEDULED	TIME SCHEDULED			SERVICEMAN ASSIGNED
		05-16-2001	AM.			Frank R.

MATERIAL RECORD

QUANTITY ISSUED	QUANTITY B/O	FCI NO	DESCRIPTION	UNIT PRICE	PER	TOTAL AMOUNT
			PREVENTIVE MAINTENANCE CONTRACT			

CHECK APPROPRIATE BOX

- ☐ Q.C
- ☐ I&T
- ☐ FEE CALL
- ☐ DELIVERY
- ☐ DEMO
- ☐ EMERGENCY CALL
- ☑ CONTRACT CALL
- ☐ PICK UP
- ☐ DEMO OWNER
- ☐ SURVEY

DEPARTED SHOP	TIME IN	TIME OUT	RETURNED SHOP	TOTAL HOURS	START MILEAGE	END MILEAGE	MISC EXPENSE	CAR FARE
	8:00 AM.	4:30 P.M.						

- ☐ MAT REQD
- ☐ PARTIAL
- ☐ OTHER
- ☐ LABOR REQD

I&T COMPLETE ☐ CALL COMPLETE ☐

SERVICE DATE 05-16-2001
WILL RETURN ON

CUSTOMER SIGNATURE
SERVICEMAN SIGNATURE Frank R.

AUTHORIZATION FOR FIRE ALARM INTERRUPTION

The undersigned has been advised by Fire Service, Inc. representative that it may be necessary to interrupt the fire protection service by disconnecting the system and/or a component in the performance of their assigned work.

The undersigned hereby assumes the responsibility for the notification of the authorities at the time the interruption is initiated and will take all of the precautions deemed necessary during the period of interruption and hold harmless Fire Service Inc. and its employees regarding interruption of the protection service during their service of the equipment

Name

Date

PROBLEM—AS DESCRIBED

Service Contract

SERVICE PERFORMED

Assisting Firemen Test Each
Of The Components of The
Service Contract Of Maintenance
Of The Smoke Detectors And Duct
Detectors On The Premises

WORK REMAINING

FCI 155

FIRE SERVICE INCORPORATED

23484

Subsidiary of Firecom, Inc.
39-27 Fifty Ninth Street
Woodside, New York 11377
(718) 899-2311

REPORT OF FIELD SERVICE

LOCATIONS | **DEVICES**

FLOOR	AREA			CABLE	XTNDR	S/D	TST/CLEAN
31	PASS/FREIGHT		(2)	2	008	BLK	DIS✓
	ELECT	A-B	(2)	2	187	BLK	✓
	TELEPH	A-B	(2)	2	187	BLK	✓
	COMM	A-B	(2)	2	187	BLK	✓
	ELECT	C-D	(2)	2	186	BLK	✓
	COAT/COMM D			2	186	BLK	
	COAT/D.W.			2	186	BLK	
	ELECT	D.W.		2	186		
	ELECT	6/SEC.	(2)	3	009	PEC 3	✓
	ELECT	F		3	016	PEC 3	✓
	SHUTTLE ELEV			3	025	PEC 3	✓
	CORE MEA.	AREA	(3)	2	244	PEC 3T	✓
	CORE MEA D	D	(2)	2	244	SIF 24	✓
	W. MEZ AREA		(2)	3	002	PEC 3T	✓
	W. MEZ D/D		(2)	3	034	EDWDS	✓
	N. SUPPLY CLOSET		(2)	2	186	BLK	✓
30	PASS/FREIGHT		(2)	2	007	BLK	✓
	ELECT	A-B	(2)	2	184	BLK	✓
	COMM	A-B	(2)	2	184	BLK	✓
	TELEPH	A-B	(2)	2	184	BLK	✓
	ELECT	C-D	(2)	2	183	BLK	✓
	TELEPH	D/COAT		2	183	BLK	✓
	TELEPH	C		2	183	BLK	✓
	COMM	C		2	183	BLK	✓
	ELECT	D.W.		2	183	BLK	
	ELECT	F		3	015	PEC 3	✓
	ELECT	6 SEC	(2)	3	008	PEC 3	✓
	SHUTTLE	ELEV		3	024	PEC 3	✓
	CORE MEA	AREA	(3)	2	242	PEC 3T	✓
(F)	CORE MEA D/D		(2)	2	243	SIF 24	✓
	W. MEZ	AREA	(2)	3	001	PEC 3T	✓
	W. MEZ	D/D	(2)	3	033	EDWDS	✓

PREVENTIVE MAINTENANCE CONTRACT

INVOICE TO: 2 W.T.C.
N.Y.C.
J GALLAGHER F.D.

SERVICEMAN ASSIGNED: Q. TORRES / F. ROSALES	SEE AT JOB SITE: F.S.I
	DATE SCHEDULED: 5-16-01
CONTRACT #: 4C00818	TYPE OF SYSTEM: LSN 2000
FEE SERVICE #	P.O. #
CALL AUHTORIZED BY	PHONE / EXT

☒ MAINTENANCE ☐ TEST
☐ JOB COMPLETE ☐ JOB INCOMPLETE
☐ SYSTEM ON LINE ☐ SYSTEM OFF LINE

DEPARTED SHOP	TIME IN	TIME OUT	RETURNED SHOP	TOTAL HOURS
AM PM	8:00 AM PM	4:30 AM PM	AM PM	

MATERIAL RECORD

QUANTITY	DESCRIPTION	COST

CUSTOMER NAME (PRINT): SILVERSTEIN
CUSTOMER SIGNATURE:
SERVICEMAN SIGNATURE:

AUTHORIZATION FOR FIRE ALARM INTERRUPTION
The undersigned has been advised by Fire Service Inc. representative that it may be necessary to interrupt the fire protection service by disconnecting the system and/or a component at the performance of their assigned work.
The undersigned hereby assumes the responsibility for the notification of the authorities at the time the interruption is initiated and will take all of the precautions deemed necessary during the period of interruption and hold harmless Fire Service Inc. and its employees regarding interruption of the protection service during their service of the equipment.

NAME DATE TIME

SERVICE PERFORMED & REMAINING: PREV. MAINTENANCE AS PER CONTRACT. — SMOKE DETECTORS (ABOVE LISTED) ON FLOORS 31 & 30 WERE TESTED & CLEANED. — CLASS E FIRE EQUIP - SYSTEM - PANELS / REMOTES ACKNOWLEDGED - OUTPUTS FUNCTIONAL AS FIRE SIGN / FLOOR PLANS / ABOVE / SIGNAL ON / CENTRAL OFFICE - CHECKS O.K TO BE CONTINUED —

30TH (F) (1) DUCT DET. CORE MEA (#243) N/ACCESS - HIGH VOLTAGE "BUSS BARS" ON WAY / OBSTACLE

(A) INACCESSIBLE (B) MISSING (C) DEFECTIVE (D) OTHER

FIRE SERVICE INCORPORATED

97659

SUBSIDIARY OF FI...COM INC.

39-27 FIFTY NINTH STREET
WOODSIDE, NEW YORK 11377
(718) 899-2311

REPORT OF FIELD SERVICE

INVOICE TO

SERVICED

TWTC
New York, N.Y.

CALL AUTHORIZED BY	CONTRACT #	FEE SERVICE #	FJ #	P O #	SEE AT JOB SITE
	Cc00818				F.S.D

PHONE	EXT	DATE SCHEDULED	TIME SCHEDULED	SERVICEMAN ASSIGNED
		05-15-2001		Frank L.

MATERIAL RECORD

QUANTITY ISSUED	QUANTITY B/O	F C I NO	DESCRIPTION	UNIT PRICE	PER	TOTAL AMOUNT

PREVENTIVE MAINTENANCE CONTRACT

CHECK APPROPRIATE BOX

- ☐ O.C
- ☐ I&T
- ☐ FEE CALL
- ☐ DELIVERY
- ☐ DEMO
- ☐ EMERGENCY CALL
- ☑ CONTRACT CALL
- ☐ PICK UP
- ☐ DEMO OWNER
- ☐ SURVEY

DEPARTED SHOP	TIME IN	TIME OUT	RETURNED SHOP	TOTAL HOURS	START MILEAGE	END MILEAGE	MISC EXPENSE	CAR FARE
	8:00 AM	4:30 PM						

- ☐ MAT REQD
- ☐ PARTIAL
- ☐ OTHER
- ☐ LABOR REQD

I&T COMPLETE ☐ CALL COMPLETE ☐

SERVICE DATE: 05-15-2001

WILL RETURN ON:

CUSTOMER SIGNATURE: James Carrigan

SERVICEMAN SIGNATURE: Frank L.

PROBLEM—AS DESCRIBED

Service Contract

SERVICE PERFORMED

Assisting Simplex Tech. on the performing of the Service Contract of Maintenance of the Smoke detectors and duct detectors in the Premises.

WORK REMAINING

AUTHORIZATION FOR FIRE ALARM INTERRUPTION

The undersigned has been advised by Fire Service, Inc. representative that it may be necessary to interrupt the fire protection service by disconnecting the system and/or a component in the performance of the assigned work.

The undersigned hereby assumes the responsibility for the notification of the authorities at the time the interruption is initiated and will take all of the precautions deemed necessary during the period of interruption and hold harmless Fire Service Inc. and its employees regarding interruption of fire protection service during their service of the equipment.

Date

Name

FCI 155
REV 6188

FIRE SERVICE INCORPORATED

23483

Subsidiary of Firecom, Inc.
39-27 Fifty Ninth Street
Woodside, New York 11377
(718) 899-2311

REPORT OF FIELD SERVICE

LOCATIONS | **DEVICES**

FLOOR	Area		CODE	NUMBER	S/D	ALARM TEST
32	PASS ELEV		2	009	BRK	✓
	ELECT	A	2	190	BRK	✓
	COMM	A	2	190	BRK	✓
	TELEPH	A	2	190	BRK	✓
	ELECT	B	2	190	BRK	✓
	COMM	B	2	190	BRK	✓
	TELEPH	B	2	190	BRK	✓
	FREIGHT	ELEV	2	009	BRK	✓
	ELECT	C	2	189	BRK	✓
	TELEPH	C/CONST	2	189	BRK	✓
	COMM	C/SUPPLY	2	189	BRK	✓
	ELECT	D	2	189	BRK	✓
	TELEPH	D/SUPPLY	2	189	BRK	✓
	ELECT	D.W	2	189	BRK	✓
	ELECT	F	3	017	PEC3T	✓
	ELECT	G	3	010	PEC3T	✓
	SECURITY CONST		3	010	PEC3T	✓
	SHUTTLE ELEV.		3	026	PEC3	✓
	CORE	MER AREA	2	248	PEC3T	✓
	CORE	MER AREA	2	248	PEC3T	✓
	CORE	MER AREA	2	248	PEC3T	✓
	CORE	MER D/D	2	247	SIF24	✓
*	CORE	MER D/D	2	247	SIF24	—
	WEST	MER AREA	2	003	PEC3T	✓
	WEST	MER AREA	2	003	PEC3T	✓
	WEST	MER D/D	3	035	EDWPS	✓
	WEST	MER D/D	3	035	COMM	✓
42	FREIGHT ELEV. S/O - BRK Unit & Base. Technician - Back in Operation					

PREVENTIVE MAINTENANCE CONTRACT

INVOICE TO: P.W.T.C
N.Y.C.

Mr. Corrigan

SERVICEMAN ASSIGNED: J. Torres / J. Parker	SEE AT JOB SITE: F.S.I
	DATE SCHEDULED: 5-15-01
CONTRACT #: S1C00818	TYPE OF SYSTEM: LSN2000
FEE SERVICE #	P.O. #
CALL AUHTORIZED BY	PHONE / EXT

☒ MAINTENANCE ☒ TEST
☐ JOB COMPLETE ☐ JOB INCOMPLETE
☐ SYSTEM ON LINE ☐ SYSTEM OFF LINE

DEPARTED SHOP	TIME IN	TIME OUT	RETURNED SHOP	TOTAL HOURS
800 AM/PM	900 AM/PM	430 AM/PM	AM/PM	

MATERIAL RECORD

QUANTITY	DESCRIPTION	COST

CUSTOMER NAME (PRINT): Silverstein
CUSTOMER SIGNATURE: Mr. Corrigan
SERVICEMAN SIGNATURE: J. Torres

AUTHORIZATION FOR FIRE ALARM INTERRUPTION
The undersigned has been advised by Fire Service Inc. representative that it may be necessary to interrupt the fire protection service by disconnecting the system and/or a component in the performance of their assigned work.
The undersigned hereby assumes the responsibility for the notification of the authorities at the time the interruption is initiated and will take all of the precautions deemed necessary during the period of interruption and hold harmless Fire Service Inc. and its employees regarding interruption of the protection service during their service of the equipment.

NAME _____ DATE _____ TIME _____

SERVICE PERFORMED & REMAINING: Preventive Maintenance As per Contract / Check / Test - Channel Smoke Detectors Units / Class E System on 32nd Fl / All Areas (As Listed) —
(*) Note D/Detector Core Mer Unit N/S / To Replace or Repairs. —
Also As per Contract / Repaired Freight Unit on 42nd Fl. — Base Defective / Contacts Wiring Loose / Repaired O.K. — Back in Operation. —

(A) INACCESSIBLE (B) MISSING (C) DEFECTIVE (D) OTHER

FIRE SERVICE INCORPORATED

97658

SUBSIDIARY OF F... COM INC.
39-27 FIFTY NINTH STREET
WOODSIDE, NEW YORK 11377
(718)899-2311

REPORT OF FIELD SERVICE

INVOICE TO

SERVICED
7 WTC
New York, N.Y.

CALL AUTHORIZED BY		CONTRACT #	FEE SERVICE #	FJ #	PO #	SEE AT JOB SITE
		S00818				F.S.D
PHONE	EXT.	DATE SCHEDULED	TIME SCHEDULED			SERVICEMAN ASSIGNED
		05-14-2001	A.M.			Frank L

MATERIAL RECORD

QUANTITY ISSUED	QUANTITY B/O	F.C.I NO	DESCRIPTION	UNIT PRICE	PER	TOTAL AMOUNT

PREVENTIVE MAINTENANCE CONTRACT

CHECK APPROPRIATE BOX

- ☐ Q.C
- ☐ I & T
- ☐ FEE CALL
- ☐ DELIVERY
- ☐ DEMO
- ☐ EMERGENCY CALL
- ☑ CONTRACT CALL
- ☐ PICK UP
- ☐ DEMO OWNER
- ☐ SURVEY

DEPARTED SHOP	TIME IN	TIME OUT	RETURNED SHOP	TOTAL HOURS	START MILEAGE	END MILEAGE	MISC EXPENSE	CAR FARE
8:00 AM.	9:00 AM	3:30 PM.	4:00 PM.					

- ☐ MAT REQD
- ☐ PARTIAL
- ☐ OTHER
- ☐ LABOR REQD

I & T COMPLETE ☐ CALL COMPLETE ☐

SERVICE DATE: 05-14-2001

WILL RETURN ON:

CUSTOMER SIGNATURE: James Coughlin

SERVICEMAN SIGNATURE: Frank L.

AUTHORIZATION FOR FIRE ALARM INTERRUPTION

The undersigned has been advised by Fire Service, Inc. representative that it may be necessary to interrupt the fire protection service by disconnecting the system and/or a component in the performance of their assigned work.

The undersigned hereby assumes the responsibility for the notification of the authorities at the time the interruption is initiated and will take all of the precautions deemed necessary during the period of interruption and hold harmless Fire Service Inc. and its employees regarding interruption of the protection service during their service of the equipment.

Date

Name

PROBLEM—AS DESCRIBED

Service Contract

SERVICE PERFORMED

Assisting Jersey Fire Dept. In Preparation of The Service Contract

WORK REMAINING

FCI 155
REV 6186

FIRE SERVICE INCORPORATED

23467

Subsidiary of Firecom, Inc.
39-27 Fifty Ninth Street
Woodside, New York 11377
(718) 899-2311

REPORT OF FIELD SERVICE

LOCATIONS	DEVICES
FLOOR	
47	STROBE PNL AFC 100 CHECK -
	Replaced Key Lock (300 Type)
46	" " "
45	STROBE PNL AFC 100 CHECK
	Replaced (1) Key Lock (300 Type)
48	" "
13	Repair On STROBE PNL AFC 101
	PANEL. -
	Also CHECK STROBE PNL #2 AFC 100
	by 13 FLOOR. -
24	FF. TAMPER S/W - Repair/Adj.
	Alarm Status. -
30	FF. TAMPER S/W - Adj/Repair
	on Alarm Status. -

TROUBLE CALL

PREVENTIVE MAINTENANCE CONTRACT

INVOICE TO: TWTC

N.Y.C.

Mr. J. Callaghan

SERVICEMAN ASSIGNED: J. Torres / F. Rosario	SEE AT JOB SITE: F.S.I.
	DATE SCHEDULED: 5-14-01
CONTRACT #: S/C 00818	TYPE OF SYSTEM: LSN 2000
FEE SERVICE #	P.O. #
CALL AUHTORIZED BY	PHONE / EXT
☑ MAINTENANCE	☐ TEST
☐ JOB COMPLETE	☐ JOB INCOMPLETE
☐ SYSTEM ON LINE	☐ SYSTEM OFF LINE

DEPARTED SHOP	TIME IN	TIME OUT	RETURNED SHOP	TOTAL HOURS
800 AM/PM	900 AM/PM	3:30 AM/PM	AM/PM	

MATERIAL RECORD

QUANTITY	DESCRIPTION	COST

CUSTOMER NAME (PRINT): SILVERSTEIN

CUSTOMER SIGNATURE: [signature]

SERVICEMAN SIGNATURE: [signature]

AUTHORIZATION FOR FIRE ALARM INTERRUPTION
The undersigned has been advised by Fire Service Inc. representatives that it may be necessary to interrupt the fire protection service by disconnecting the system and/or a component in the performance of their assigned work.
The undersigned hereby assumes the responsibility for the notification of the authorities at the time the interruption is initiated and will take all of the precautions deemed necessary during the period of interruption and hold harmless Fire Service Inc. and its employees regarding interruption of fire protection service during their service of the equipment.

NAME DATE TIME

SERVICE PERFORMED & REMAINING: S/Contract. Repairs on above floors as per F.S.I. - STATUS Report. - on floors LISTED. -

(7) Also Asistry Software Eng. Firelock on 6th F. ARCADE System - FAN UNIT - STATUS -

(A) INACCESSIBLE (B) MISSING (C) DEFECTIVE (D) OTHER

FIRE SERVICE INCORPORATED

97657

SUBSIDIARY OF F... COM INC.

39-27 FIFTY NINTH STREET
WOODSIDE, NEW YORK 11377
(718) 899-2311

REPORT OF FIELD SERVICE

INVOICE TO

SERVICED

TWTS
Wood York, N.Y.

CALL AUTHORIZED BY		CONTRACT #	FEE SERVICE #	FJ #	P O #	SEE AT JOB SITE
		Sc00818				F S J
PHONE	**EXT**	**DATE SCHEDULED**	**TIME SCHEDULED**			**SERVICEMAN ASSIGNED**
		05-09-2001	P.M.			Frank L.

MATERIAL RECORD

QUANTITY ISSUED	QUANTITY B/O	F C I NO	DESCRIPTION	UNIT PRICE	PER	TOTAL AMOUNT

PREVENTIVE MAINTENANCE CONTRACT

CHECK APPROPRIATE BOX

- ☐ O. C
- ☐ I & T
- ☐ FEE CALL
- ☐ DELIVERY
- ☐ DEMO
- ☐ EMERGENCY CALL
- ☑ CONTRACT CALL
- ☐ PICK UP
- ☐ DEMO OWNER
- ☐ SURVEY

DEPARTED SHOP	TIME IN	TIME OUT	RETURNED SHOP	TOTAL HOURS	START MILEAGE	END MILEAGE	MISC EXPENSE	CAR FARE
	800 A.M.	430 P.M.						

- ☐ MAT REQD
- ☐ PARTIAL
- ☐ OTHER
- ☐ LABOR REQD

I & T COMPLETE ☐ CALL COMPLETE ☐

SERVICE DATE: 05-09-2001

WILL RETURN ON:

CUSTOMER SIGNATURE: James Carpenter

SERVICEMAN SIGNATURE: Frank L.

AUTHORIZATION FOR FIRE ALARM INTERRUPTION

The undersigned has been advised by Fire Service, Inc. representative that it may be necessary to interrupt the fire protection service by disconnecting the system and/or a component in the performance of their assigned work.

The undersigned hereby assumes the responsibility for the notification of the authorities at the time the interruption is initiated and will take all of the precautions deemed necessary during the period of interruption and hold harmless Fire Service Inc. and its employees regarding interruption of the protection service during their service of the equipment.

Name

Date

PROBLEM—AS DESCRIBED

Service Contract

SERVICE PERFORMED

Assisting Jimmy Tesse on the performance of the Service Contract. Left Client advice of the area smoke and duct detectors.

WORK REMAINING

FCI 155
REV 6188

FIRE SERVICE INCORPORATED

23482

Subsidiary of Firecom, Inc.
39-27 Fifty Ninth Street
Woodside, New York 11377
(718) 899-2311

REPORT OF FIELD SERVICE

LOCATIONS | **DEVICES**

FLOOR	AREA'S			CABLE	ZONE	S/D	TST (1) PHONE
34	PASS/FREIGHT			2	011	BLK	✓
	ELECT	A-B	(2)	2	194	BLK	✓
	COMM	A-B	(2)	2	194	BLK	✓
	TELEPH	A-B	(2)	2	194	BLK	✓
	ELECT	C-D	(2)	2	193	BLK	✓
	ELECT	D.W.		2	193	BLK	✓
	ELECT	F		4	048	PEC 3	✓
	ELEV EX	A.V. ROOM		4	048	PEC 3	✓
	ELECT	G/SEC.	(2)	4	072	PEC 3T	✓
	TELEPH	C-D	(2)	2	193	BLK	✓
	MEDICAL DPT	AREA		2	193	BLK	✓
	SHUTTLE	ELEV.		4	000	PEC 3	✓
	CORE HER	AREA	(3)	2	252	PEC 3T	✓
	CORE HER	D/DET.	(2)	2	251	EDWDS	✓
	W. HER	AREA.		4	024	PEC 3	✓
	W. HER	D/DET.		4	096	EDWDS	✓
33	ELECT	A-B	(2)	2	191	BLK	✓
	COMM	A-B	(2)	2	191	BLK	✓
	TELEPH	A-B	(2)	2	191	BLK	✓
	ELECT	COMM C	(2)	2	192	BLK	✓
	ELECT	D.W		2	192	BLK	✓
	ELECT	F		3	018	PEC 3	✓
	ELECT	G/SECURITY	(2)	3	011	PEC 3	✓
	TELEPH	SWITCH C		2	192	BLK	✓
	TELEPH	CLOAT D		2	192	BLK	✓
	FREIGHT	PASS	(2)	21	010	BLK	✓
	SHUTTLE	ELEV		3	027	PEC 3	✓
	CORE HER	AREA	(3)	2	250	PEC 3T	✓
	CORE HER	D/D	(2)	2	249	SIE 24	✓
	W HER	AREA	(2)	3	004	PEC 3T	✓
	W. HER	D/D	(2)	3	036	EDWDS	✓

PREVENTIVE MAINTENANCE CONTRACT

INVOICE TO: J.W.T.C. (SOLOMON BROTHERS N.Y.C.)

SERVICEMAN ASSIGNED	SEE AT JOB SITE
J. TORRES / J. ROSARIO	F.J.F.
CONTRACT # S/C00818	DATE SCHEDULED 5-9-01
FEE SERVICE #	TYPE OF SYSTEM US2000
CALL AUTHORIZED BY	P.O. # / PHONE / EXT

☑ MAINTENANCE ☐ TEST
☐ JOB COMPLETE ☐ JOB INCOMPLETE
☐ SYSTEM ON LINE ☐ SYSTEM OFF LINE

DEPARTED SHOP	TIME IN	TIME OUT	RETURNED SHOP	TOTAL HOURS
AM PM	800 AM PM	430 AM PM	AM PM	

MATERIAL RECORD

QUANTITY	DESCRIPTION	COST

CUSTOMER NAME (PRINT) SILVERSTONE
CUSTOMER SIGNATURE
SERVICEMAN SIGNATURE

AUTHORIZATION FOR FIRE ALARM INTERRUPTION
The undersigned has been advised by Fire Service Inc. representative that it may be necessary to interrupt the fire protection service by disconnecting the system and/or a component in the performance of their assigned work.
The undersigned hereby assumes the responsibility for the notification of the authorities at the time the interruption is initiated and will take all of the precautions deemed necessary during the period of interruption and hold harmless Fire Service Inc. and its employees regarding interruption of the protection service during their service of the equipment.

NAME DATE TIME

SERVICE PERFORMED & REMAINING S/CONTRACT / PREV. MAINTENANCE SMOKE DETECTORS ON FLOORS 34/33RD AS LISTED ABOVE. — SYSTEM BACK/RESET/BACK TO OPERATION

(A) INACCESSIBLE (B) MISSING (C) DEFECTIVE (D) OTHER

FIRE SERVICE INCORPORATED

97656

SUBSIDIARY OF F.. _COM INC.

39-27 FIFTY NINTH STREET
WOODSIDE, NEW YORK 11377
(718) 899-2311

REPORT OF FIELD SERVICE

INVOICE TO

SERVICED
TWTC
New York, N.Y.

CALL AUTHORIZED BY		CONTRACT #	FEE SERVICE #	F.J.#	P.O. #	SEE AT JOB SITE
		SC00818				F.S.D
PHONE	EXT	DATE SCHEDULED	TIME SCHEDULED			SERVICEMAN ASSIGNED
		05-08-2001	A.M.			Frank R.

MATERIAL RECORD

QUANTITY ISSUED	QUANTITY B/O	F.C.I. NO.	DESCRIPTION	UNIT PRICE	PER	TOTAL AMOUNT

PREVENTIVE MAINTENANCE CONTRACT

CHECK APPROPRIATE BOX

- ☐ Q.C
- ☐ I & T
- ☐ FEE CALL
- ☐ DELIVERY
- ☐ DEMO
- ☐ EMERGENCY CALL
- ☑ CONTRACT CALL
- ☐ PICK UP
- ☐ DEMO OWNER
- ☐ SURVEY

DEPARTED SHOP	TIME IN	TIME OUT	RETURNED SHOP	TOTAL HOURS	START MILEAGE	END MILEAGE	MISC EXPENSE	CAR FARE
	8:00 AM	4:30 PM						

- ☐ MAT REQD
- ☐ PARTIAL
- ☐ OTHER
- ☐ LABOR REQD

I & T COMPLETE ☐ CALL COMPLETE ☐

SERVICE DATE: 05-08-2001

WILL RETURN ON

CUSTOMER SIGNATURE

SERVICEMAN SIGNATURE

PROBLEM—AS DESCRIBED

Service Contract

SERVICE PERFORMED

Assisting Inspector Torre See the Contract for Testing of the Sprinkler Contract & Maintenance of the Area Smoke Detectors And Duct Detectors.

WORK REMAINING

FCI 155
REV 6186

AUTHORIZATION FOR FIRE ALARM INTERRUPTION

The undersigned has been advised by Fire Service, Inc. representative that it may be necessary to interrupt the fire protection service by disconnecting the system and/or a component in the performance of the assigned work.

The undersigned hereby assumes the responsibility for the notification of the authorities at the time the interruption is initiated and will take all of the precautions deemed necessary during the period of interruption and hold harmless Fire Service Inc. and its employees regarding interruption of fire protection service during the service of the equipment.

Date

Name

FIRE SERVICE INCORPORATED

23481

Subsidiary of Firecom, Inc.
39-27 Fifty Ninth Street
Woodside, New York 11377
(718) 899-2311

REPORT OF FIELD SERVICE

LOCATIONS | **DEVICES**

FLOOR	AREA			CABLE	XTNDR	S/D	TST CHAN
35	ELEC	A		2	196	BLK	✓
	COMM	A		2	196	BLK	✓
	TELEPH	A		2	196	BLK	✓
	ELEC	B		2	196	BLK	✓
	COMM	B		2	196	BLK	✓
	TELEPH	B		2	196	BLK	✓
	PASS/FREIGHT		(2)	2	012	BLK	✓
	ELEC	G		4	073	PEC 3	✓
	SECURITY CABINET			4	073	PEC 3	✓
	ELEC	C		4	049	PEC 3	✓
	ELEC	D		4	049	PEC 3	✓
	ELEC	F		4	049	PEC 3	✓
	ELEC	F1		4	049	PEC 3	✓
	SHUTTLE ELEV			4	001	PEC 3	✓
	W. MEZ	AREA		4	025	PEC 3	✓
	W. MEZ	S/D		4	097	EQUIP	✓
42	TTB	UNIT	CHECKS TERMINALS				
39	TTB	UNIT	"	"			

INVOICE TO: W.T.C. (SILVERSTEIN PROPERTIES) N.Y.C.

SERVICEMAN ASSIGNED: J. TORRES / F. ROSARIO	SEE AT JOB SITE: F.S.I
	DATE SCHEDULED: 5-8-01
CONTRACT #: S/C 00 818	TYPE OF SYSTEM: LSN 2000
FEE SERVICE #	P.O. #
CALL AUHTORIZED BY	PHONE / EXT

☒ MAINTENANCE ☐ TEST
☐ JOB COMPLETE ☐ JOB INCOMPLETE
☐ SYSTEM ON LINE ☐ SYSTEM OFF LINE

DEPARTED SHOP	TIME IN	TIME OUT	RETURNED SHOP	TOTAL HOURS
AM PM	800 AM PM	430 AM PM	AM PM	

MATERIAL RECORD

QUANTITY	DESCRIPTION	COST
	PREVENTIVE MAINTENANCE CONTRACT	

CUSTOMER NAME (PRINT): SILVERSTEIN
CUSTOMER SIGNATURE:
SERVICEMAN SIGNATURE:

AUTHORIZATION FOR FIRE ALARM INTERRUPTION
The undersigned has been advised by Fire Service Inc. representative that it may be necessary to interrupt the fire protection service by disconnecting the system and/or components in the performance of their assigned work.
The undersigned hereby assumes the responsibility for the notification of the authorities at the time the interruption is initiated and will take all of the precautions deemed necessary during this period of interruption and hold harmless Fire Service Inc. and its employee regarding interruption of the protection service during this service of the equipment.

NAME DATE TIME

SERVICE PERFORMED & REMAINING: SERVICE PERFORMED / PARTS MAINTENANCE ON SMOKE DETECTION CHECK FIRE ALARM FLOOR 35TH (AS LISTED) ALL AREAS. — MED CERTIFIED TECH ON 39/42ND FL. FOR CHECKS ON INPUTS TERMINALS FOR STOP/START FAN UNITS DISPLAYS FLOORS 40/41/42/43. — SYSTEM LEFT BACK IN OPERATION

(A) INACCESSIBLE (B) MISSING (C) DEFECTIVE (D) OTHER

FIRE SERVICE INCORPORATED

84489

SUBSIDIARY OF F...C ..INC
39-27 FIFTY NINTH STREET
WOODSIDE, NEW YORK 11377
(718)899-2311

REPORT OF FIELD SERVICE

INVOICE TO

SERVICED
7 W T C NEW YORK
NEW . YORK

CALL AUTHORIZED BY		CONTRACT #	FEE SERVICE #	F.J #	P.O #	SEE AT JOB SITE
SHOP		U.P.S 818				F.S.D
PHONE	EXT	DATE SCHEDULED	TIME SCHEDULED			SERVICEMAN ASSIGNED
		5/4/01	AM			C. FORERO

MATERIAL RECORD

QUANTITY ISSUED	QUANTITY B/O	F C I NO	DESCRIPTION	UNIT PRICE	PER	TOTAL AMOUNT

PREVENTIVE MAINTENANCE CONTRACT

AUTHORIZATION FOR FIRE ALARM INTERRUPTION

The undersigned has been advised by Fire Service, Inc. representative that it may be necessary to interrupt the fire protection service by disconnecting the system and/or a component in the performance of their assigned work.

The undersigned hereby assumes the responsibility for the notification of the authorities at the time the interruption is initiated and will take all of the precautions deemed necessary during the period of interruption and hold harmless Fire Service Inc. and its employees regarding interruption of the protection service during their service of the equipment

Name

Date

CHECK APPROPRIATE BOX

- ☐ Q C
- ☐ I & T
- ☐ FEE CALL
- ☐ DELIVERY
- ☐ DEMO
- ☐ EMERGENCY CALL
- ☒ CONTRACT CALL
- ☐ PICK UP
- ☐ DEMO OWNER
- ☐ SURVEY

DEPARTED SHOP	TIME IN	TIME OUT	RETURNED SHOP	TOTAL HOURS	START MILEAGE	END MILEAGE	MISC EXPENSE	CAR FARE
800	900	200						
AM	AM	PM						

☐ MAT REQD ☐ PARTIAL
☐ OTHER ☐ LABOR REQD

I & T COMPLETE ☐ CALL COMPLETE ☐

SERVICE DATE: 5-4-01

WILL RETURN ON

CUSTOMER SIGNATURE

SERVICEMAN SIGNATURE: C. FORERO CACTUS JAB

PROBLEM—AS DESCRIBED PREVENTIVE MAINTENANCE / U.P.S SERVICE CONTRACT

SERVICE PERFORMED Arrived At Building, Checked U.P.S System, and Battery Racks (20 Batteries) Took Readings

TOTAL - BATTERY VOLTAGE = 139.8 VOLTS-A/DC

BATTERY AMP = .3 AMPS

L-1 = 11.3

L-2 = 10.9

INPUT - VOLTAGE = 208. A/C

246. A/C

WORK REMAINING Cleaned And Checked U.P.S And Battery Racks, System OK

FIRE SERVICE INCORPORATED

97655

SUBSIDIARY OF F...C... INC
39-27 FIFTY NINTH STREET
WOODSIDE, NEW YORK 11377
(718) 899-2311

REPORT OF FIELD SERVICE

INVOICE TO

SERVICED
7WTC
N.Y.C.

CALL AUTHORIZED BY	CONTRACT #	FEE SERVICE #	FJ #	P.O. #	SEE AT JOB SITE
	Sc00518				F.S.D.

PHONE	EXT.	DATE SCHEDULED	TIME SCHEDULED	SERVICEMAN ASSIGNED
		5/2/2001	A.M.	Frank L.

MATERIAL RECORD

QUANTITY ISSUED	QUANTITY B/O	FCI NO	DESCRIPTION	UNIT PRICE	PER	TOTAL AMOUNT
			PREVENTIVE MAINTENANCE CONTRACT			

CHECK APPROPRIATE BOX

- ☐ Q.C
- ☐ I & T
- ☐ FEE CALL
- ☐ DELIVERY
- ☐ DEMO
- ☐ EMERGENCY CALL
- ☑ CONTRACT CALL
- ☐ PICK UP
- ☐ DEMO OWNER
- ☐ SURVEY

DEPARTED SHOP	TIME IN	TIME OUT	RETURNED SHOP	TOTAL HOURS	START MILEAGE	END MILEAGE	MISC EXPENSE	CAR FARE
	8:00 A.M.	4:30 P.M.						

- ☐ MAT REQD
- ☐ PARTIAL
- ☐ OTHER
- ☐ LABOR REQD

I & T COMPLETE ☐ CALL COMPLETE ☐

SERVICE DATE: 5/2/2001
WILL RETURN ON:

CUSTOMER SIGNATURE
SERVICEMAN SIGNATURE: Frank L.

AUTHORIZATION FOR FIRE ALARM INTERRUPTION

The undersigned has been advised by Fire Service, Inc. representative that it may be necessary to interrupt the fire protection service by disconnecting the system and/or a component in the performance of their assigned work.

The undersigned hereby assumes the responsibility for the notification of the authorities at the time the interruption is initiated and will take all of the precautions deemed necessary during the period of interruption and hold harmless Fire Service Inc. and its employees regarding interruption of fire protection service during their service of the equipment.

Name

Date

PROBLEM—AS DESCRIBED

Service Contract

SERVICE PERFORMED

Assigning Tech. Inspection
See the performing OK Fire
Service Detail Sheet.

WORK REMAINING

FCI 155
REV 6186

FIRE SERVICE INCORPORATED

23479

Subsidiary of Firecom, Inc.
39-27 Fifty Ninth Street
Woodside, New York 11377
(718) 899-2311

REPORT OF FIELD SERVICE

LOCATIONS | **DEVICES**

FLOOR	DEVICE			ZONE	XMTR	S/D	T.ST CLEAN
37	PASS/FREIGHT	(2)		2	014	BLK	✓
	SHUTTLE	PASS ELEV.		4	003	PEC 3	✓
	ELECT	A-B	(3)	2	200	BRK	✓
	COMM.	A-B	(3)	2	200	BRK	✓
	TELEPH	A-B	(3)	2	200	BRK	✓
	ELECT	C-D	(2)	2	199	BRK	✓
	ELECT	D.W		2	199	BRK	✓
	ELECT	'F'	EAST	4	051	PEC 3	✓
	ELECT	G/SEC	(2)	4	075	PEC 3	✓
	TELEPH	C-D	(2)	2	199	BLK	✓
	COMM	C		2	199	BLK	✓
	CORE	MEN	AREA (3)	2/002	258	PEC3T	✓
	CORE	MEN	D/D (2)	2/001	257	HOCHKI	✓
	W.	MEN	AREA (2)	4	027	PEC3T	✓
	W	MEN	D/D (2)	4	099	ENNI	✓
36	ELECT	A-B	(2)	2	198	BLK	✓
	COMM	A-B	(2)	2	198	BLK	✓
	TELEPH	A-B	(2)	2	198	BLK	✓
	ELECT	'F'	EAST	4	050	PEC 3	✓
	ELECT	D.W		2	197	BLK	✓
	ELECT	G/SEC	(2)	4	074	PEC 3	✓
	ELECT	C-D	(2)	2	197	BLK	✓
	TELEPH	COMM C-D	(2)	2	197	BLK	✓
	COMM	LOUNGE	R	2	197	BLK	✓
	PASS	FREIGHT	ELEV. (2)	2	013	BRK	✓
	SHUTTLE	ELEV.	PASS	4	002	PEC 3	✓
WEST	CORE	MEN	D/D	4	098	CHUNS	✓
WEST	CORE	MEN	D/D	4	098	ENNI	✓
WEST	CORE	MEN	AREA (3)	4	026	PEC3T	✓
	CORE	MEN	D/D	2	255	SIF24	✓
	CORE	MEN	D/D	2	255	SIF24	✓
	CORE	MEN	AREA (3)	2	000	PEC3T	✓

INVOICE TO:
T.W.T.C.
Solomon Brothers Facility
N.Y.C.

SERVICEMAN ASSIGNED: J. Tolley
SEE AT JOB SITE: F.S.I.
DATE SCHEDULED: 5-2-01
CONTRACT #: S/C00 8/8
TYPE OF SYSTEM: CSN2000
FEE SERVICE #:
P.O #:
CALL AUHTORIZED BY:
PHONE:
EXT:

☐ MAINTENANCE ☑ TEST
☐ JOB COMPLETE ☐ JOB INCOMPLETE
☐ SYSTEM ON LINE ☐ SYSTEM OFF LINE

DEPARTED SHOP	TIME IN	TIME OUT	RETURNED SHOP	TOTAL HOURS
AM PM	800 AM PM	420 AM PM	AM PM	

MATERIAL RECORD

QUANTITY	DESCRIPTION	COST
	PREVENTIVE MAINTENANCE CONTRACT	

CUSTOMER NAME (PRINT): SILVERSTEIN
CUSTOMER SIGNATURE:
SERVICEMAN SIGNATURE:

AUTHORIZATION FOR FIRE ALARM INTERRUPTION
The undersigned has been advised by Fire Service Inc. representative that it may be necessary to interrupt the fire protection service by disconnecting the system and/or a component as the performance of their assigned work.
The undersigned hereby assumes the responsibility for the notification of the public at the time the interruption is initiated and will take all of the precautions deemed necessary during the period of interruption and hold harmless Fire Service Inc. and its employees regarding interruption of fire protection service during their service of the equipment.

DATE
TIME
NAME

SERVICE PERFORMED & REMAINING: S/Contract - Perf Maintenance on Floors 37/36 (Solomon Salty Brothers) Off Area / Clean / Check Alarm - Shunt Relay - Switch Operation with Ex Listen Mode — System Full Reset — Annunciation at F.E.S. — Back in Operation —

(A) INACCESSIBLE (B) MISSING (C) DEFECTIVE (D) OTHER

FIRE SERVICE INCORPORATED

97654

SUBSIDIARY OF FireCom INC.

39-27 FIFTY NINTH STREET
WOODSIDE, NEW YORK 11377
(718) 899-2311

REPORT OF FIELD SERVICE

INVOICE TO

SERVICED
7WTC
NYC

CALL AUTHORIZED BY		CONTRACT #	FEE SERVICE #	FJ #	P O #	SEE AT JOB SITE
		Sc00818				F.S.D
PHONE	EXT	DATE SCHEDULED	TIME SCHEDULED			SERVICEMAN ASSIGNED
		5/1/2001	P.M.			Frank L.

MATERIAL RECORD

QUANTITY ISSUED	QUANTITY B/O	FCI NO	DESCRIPTION	UNIT PRICE	PER	TOTAL AMOUNT

PREVENTIVE MAINTENANCE CONTRACT

CHECK APPROPRIATE BOX

- ☐ Q.C
- ☐ I & T
- ☐ FEE CALL
- ☐ DELIVERY
- ☐ DEMO
- ☐ EMERGENCY CALL
- ☑ CONTRACT CALL
- ☐ PICK UP
- ☐ DEMO OWNER
- ☐ SURVEY

DEPARTED SHOP	TIME IN	TIME OUT	RETURNED SHOP	TOTAL HOURS	START MILEAGE	END MILEAGE	MISC EXPENSE	CAR FARE
	8:00 A.M.	4:30 P.M.						

- ☐ MAT REQD
- ☐ PARTIAL
- ☐ OTHER
- ☐ LABOR REQD

I & T COMPLETE ☐ CALL COMPLETE ☐

SERVICE DATE: 5/1/2001

WILL RETURN ON:

CUSTOMER SIGNATURE: James Caughlin

SERVICEMAN SIGNATURE: Frank L.

AUTHORIZATION FOR FIRE ALARM INTERRUPTION

The undersigned has been advised by Fire Service, Inc. representative that it may be necessary to interrupt the fire protection service by disconnecting the system and/or a component in the performance of their assigned work.

The undersigned hereby assumes the responsibility for the notification of the authorities at the time the interruption is initiated and will take all of the precautions deemed necessary during the period of interruption and hold harmless Fire Service Inc. and its employees regarding interruption of fire protection service during their service of the equipment

Date

Name

X

PROBLEM—AS DESCRIBED

Service Contract

SERVICE PERFORMED

Assisting Lock & Security Tech.
See the Services of the Service Contract.

WORK REMAINING

FCI 155
REV 8186

FIRE SERVICE INCORPORATED

23478

Subsidiary of Firecom, Inc.
39-27 Fifty Ninth Street
Woodside, New York 11377
(718) 899-2311

REPORT OF FIELD SERVICE

LOCATIONS | **DEVICES**

FLOOR	AREAS			CODE	XMTR	S/D	TST/CLEAN
40	ELEC	A		2	207	BLK	✓
	COMM	A		2	207	BLK	✓
	TELEPH	A		2	207	BLK	✓
	ELEC	B		2	207	BLK	✓
	COMM	B		2	207	BLK	✓
	TELEPH	B		2	207	BLK	✓
	PASS/FREIGHT	ELEV (2)		21	017	BLK	✓
	ELEC	C		2	208	BLK	✓
	COMM/COMM	C		2	208	APOLLO	✓
	TELE/STORAGE	C		2	208	APOLLO	✓
	ELEC	D		2	208	BLK	✓
	TELE/STORAGE	D		2	208	APOLLO	✓
	COMM/STORAGE	D		2	208	APOLLO	✓
	CORE	MED D/D		2	015	APOLLO	✓
	CORE	MED D/D		2	015	APOLLO	✓
	CORE	AREA CEILING		2	208	APOLLO	✓
	CORE	AREA CEILING		2	208	APOLLO	✓
(*)	ELECT	'F'	MISSING/NO S/D DETECTOR				—
	SECURITY	CLOSET		4	078	PEC3	✓
	ELECT	'G'		4	078	PEC3	✓
	FILE	RM		2	208	APOLLO	✓
	FILE	RM		2	208	APOLLO	✓
LOBBY	F.C. STATION	REPAIR DCM 40				DISPLAY	#16
	PURGE/PRESS	FLOORS.					
18	FTB	REPAIR M	795 MOTHER BOARD.				
	REPLACE	(2) 792 P.C. BOARDS - DEFECTIVE					
	FOR REPAIR ON	PURGE/PRESSURIZATION	ON				
	18TH FL.	—					

INVOICE TO:
7W T.C
(Solomon Smith Barney)
N.Y.C.

SERVICEMAN ASSIGNED: J. Tolley	SEE AT JOB SITE: F.S.I.
	DATE SCHEDULED: 5-1-01
CONTRACT #: 5/C00818	TYPE OF SYSTEM: LSN2000
FEE SERVICE #	P.O. #
CALL AUHTORIZED BY	PHONE / EXT

☑ MAINTENANCE ☐ TEST
☐ JOB COMPLETE ☐ JOB INCOMPLETE
☐ SYSTEM ON LINE ☐ SYSTEM OFF LINE

DEPARTED SHOP	TIME IN	TIME OUT	RETURNED SHOP	TOTAL HOURS
AM/PM	800 AM/PM	430 AM/PM	AM/PM	

MATERIAL RECORD

QUANTITY	DESCRIPTION	COST
21	792 P.C. BOARDS.	
	PREVENTIVE MAINTENANCE CONTRACT	

CUSTOMER NAME (PRINT): SILVERSTEIN
CUSTOMER SIGNATURE:
SERVICEMAN SIGNATURE:

AUTHORIZATION FOR FIRE ALARM INTERRUPTION
The undersigned has been advised by Fire Service Inc. representatives that it may be necessary to interrupt the fire protection service by disconnecting the system and/or a component in the performance of their [illegible] work.
The undersigned hereby assumes the responsibility for the notification of the authorities at the time the interruption is initiated and will take all of the precautions deemed necessary during the period of interruption and hold harmless Fire Service Inc. and its employees regarding interruption of the protection service during their service of the equipment.

TIME
DATE
NAME

SERVICE PERFORMED & REMAINING: SCHEDULED - PREVENTIVE MAINTENANCE SMOKE DETECTORS ON 40TH FL (SOLOMON) ALL ELEC'L CLOSETS / CEILING LOBBIES / STORAGE & MACHINE RM'S / CORE MED'S AS LISTED. —
(*) NOTE: 'F' ELECT CLOSET S/D NOT EXISTING - MISSING. —
(*) ALSO PERFORMED REPAIR / REPLACING BOARDS ON 18TH FTB / PURGE / PRESS. FANS / OPER

(A) INACCESSIBLE (B) MISSING (C) DEFECTIVE (D) OTHER

FIRE SERVICE INCORPORATED

: 23480

Subsidiary of Firecom, Inc.
39-27 Fifty Ninth Street
Woodside, New York 11377
(718) 899-2311

REPORT OF FIELD SERVICE

LOCATIONS			DEVICES			
FLOOR	AREA		CABLE	KIND	B/D	TST CLEAN
41	ELECT	A	2	209	BLK	✓
	COMM	A	2	209	BLK	✓
	TELEPH	A	2	209	BLK	✓
	COMM	B	2	209	BLK	✓
	ELECT	B	2	209	BLK	✓
	TELEPH	B	2	209	BLK	✓
	PASS	ELEV.	2	018	BLK	✓
	FREIGHT	ELEV	2	018	BLK	✓
	COMM/	COAT C	2	195	APOLLO	✓
	ELECT	C	2	195	APOLLO	✓
	TELEPH	C	2	195	APOLLO	✓
	CORE	MEN D/D	2	016	APOLLO	✓
	CORE	WOM D/D	2	016	APOLLO	✓
	CORE	AREA LEVEL	2	019	APOLLO	✓
	CORE	AREA MEZ.	2	019	APOLLO	✓
	ELECT	G	4	079	PEC3T	✓
	SECURITY	CLOSET	4	079	PEC3T	✓
	SHUTTLE	ELEV.	4	007	PEC3	✓
46	STROBE PANEL AFL 100 / 4 CKT OUT - STROBE					
	(2) BATTERIES 12VDC REPLACED.					
39	STROBE PNL AFL 100 / (2) BATTERIES 12VDC					
	REPLACED - PNL UPDATE MODIF -					
18	PURGE / PRESS. FAN / ACTIVATION					
	TROUBLE SHOOTING / REPAIRS -					

PREVENTIVE MAINTENANCE CONTRACT

INVOICE TO: J.W.T.C.
Solomon Judaic Library
N.Y.C.

SERVICEMAN ASSIGNED: J. Tower. / F. Rosani	SEE AT JOB SITE: F.I.I.
	DATE SCHEDULED: 4-30-01
CONTRACT #: S/C00818	TYPE OF SYSTEM: LSN 2000
FEE SERVICE #	P.O. #
CALL AUHTORIZED BY	PHONE / EXT

☒ MAINTENANCE ☒ TEST
☐ JOB COMPLETE ☐ JOB INCOMPLETE
☐ SYSTEM ON LINE ☐ SYSTEM OFF LINE

DEPARTED SHOP	TIME IN	TIME OUT	RETURNED SHOP	TOTAL HOURS
900 AM PM	900 AM PM	5:30 PM	AM PM	

AUTHORIZATION FOR FIRE ALARM INTERRUPTION
The undersigned has been advised by Fire Service Inc. representatives that it may be necessary to interrupt the fire protection service by disconnecting the system and/or a component in the performance of their assigned work.
The undersigned hereby assumes the responsibility for the notification of the authorities at the time the interruption is initiated and will take all of the precautions deemed necessary during the period of interruption and hold harmless Fire Service Inc. and its employees reporting interruption of the protection service during their service of the equipment.

NAME DATE TIME

MATERIAL RECORD

QUANTITY	DESCRIPTION	COST
2	792 P.C. BOARDS	385
4		

CUSTOMER NAME (PRINT): SILVERSTEIN
CUSTOMER SIGNATURE:
SERVICEMAN SIGNATURE:

SERVICE PERFORMED & REMAINING: PREV. MAINTENANCE AS PER CONTRACT ON 4TH FLOOR SMOKE DETECTION AREAS / EFFECT LOCATIONS AS (LISTED) ABOVE. - (ALL) REPAIRS ON DEFECTIVE OR MALFUNCTION ON STROBES PANEL 4'X'H & 39" FL - REPLACED DEFECTIVE BATTERIES LOW OUTPUT VOLTAGE - (4) UNITS 12VDC. ALSO TROUBLE SHOOTED / STROBES PROBLEM WITH 18'FL PURGE / PRESSURIZATION FAN UNIT - (2) 792 P.C. REPLACED - NEED TO REPAIR - 195 BOARD PANEL T/B / DATA MONITOR SYS. - SYSTEM OK / RESET BACK TO OPERATION

(A) INACCESSIBLE (B) MISSING (C) DEFECTIVE (D) OTHER

FIRE SERVICE INCORPORATED

97653

SUBSIDIARY OF FIRECOM INC.

39-27 FIFTY NINTH STREET
WOODSIDE, NEW YORK 11377
(718) 899-2311

REPORT OF FIELD SERVICE

INVOICE TO

SERVICED
TWTC
NYC

CALL AUTHORIZED BY		CONTRACT #	FEE SERVICE #	FJ #	PO #	SEE AT JOBSITE
		SC00818				F.S.D
PHONE	**EXT**	**DATE SCHEDULED**	**TIME SCHEDULED**			**SERVICEMAN ASSIGNED**
		4/30/2001	A.M.			Frank L.

MATERIAL RECORD

QUANTITY ISSUED	QUANTITY B/O	FCI NO	DESCRIPTION	UNIT PRICE	PER	TOTAL AMOUNT
			PREVENTIVE MAINTENANCE CONTRACT			

CHECK APPROPRIATE BOX

- ☐ Q.C
- ☐ I & T
- ☐ FEE CALL
- ☐ DELIVERY
- ☐ DEMO
- ☐ EMERGENCY CALL
- ☑ CONTRACT CALL
- ☐ PICK UP
- ☐ DEMO OWNER
- ☐ SURVEY

DEPARTED SHOP	TIME IN	TIME OUT	RETURNED SHOP	TOTAL HOURS	START MILEAGE	END MILEAGE	MISC EXPENSE	CAR FARE
8:00 AM	9:00 AM.	4:30 PM.						

☐ MAT RECD ☐ PARTIAL
☐ OTHER ☐ LABOR RECD

I & T COMPLETE ☐ CALL COMPLETE ☐

SERVICE DATE: 4/30/2001

WILL RETURN ON:

CUSTOMER SIGNATURE

SERVICEMAN SIGNATURE: Frank L.

AUTHORIZATION FOR FIRE ALARM INTERRUPTION

The undersigned has been advised by Fire Service, Inc. representative that it may be necessary to interrupt the fire protection service by disconnecting the system and/or a component in the performance of their assigned work.
The undersigned hereby assumes the responsibility for the notification of the authorities at the time the interruption is initiated and will take all of the precautions deemed necessary during the period of interruption and hold harmless Fire Service Inc. and its employees regarding interruption of the protection service during their service of the equipment.

Date

Name

PROBLEM—AS DESCRIBED

Service Contract

SERVICE PERFORMED

Reporting Tech. Jimmy Tosso
Per the Terms & Conditions of the Service Contract

WORK REMAINING

FCI 155
REV 6/85

FIRE SERVICE INCORPORATED

23473

Subsidiary of Firecom, Inc.
39-27 Fifty Ninth Street
Woodside, New York 11377
(718) 899-2311

REPORT OF FIELD SERVICE

LOCATIONS				DEVICES				
FLOOR	AREA			CABLE	XTNSN	S/D	TST CLEAN	
37	E.H.R	AREA	(x2)	1	201	BLK	✓	
	CARS	16-20						
31	E.H.R.	AREA		1	188	BLK	✓	
	CARS	13-14-15	(x2)					
31	E.H.R	DUCT	DET	2	246	SIF24	✓	
		E.C.R						
31	E.H.R	AREA		1	188	BLK	✓	
	E.H.R	DUCT	DET. E.C.R	2	246	SIF24	✓	
	CARS	11-12						
30	E.H.R	AREA	(x2)	1	185	BLK	✓	
	CARS	13-14-15						
30	E.H.R	AREA		1	185	BLK	✓	
	CARS	11-12						
16	E.H.R	AREA	EAST	1	195	BLK	✓	
16	E.H.R	AREA	EAST	1	195	BLK	✓	
16	E.H.R	DUCT	EAST	1	254	EQUIS	✓	
16	E.H.R	AREA	WEST	1	195	BLK	✓	
16	E.H.R	DUCT	DET. WEST	1	254	EQUIP	✓	
15	E.H.R	AREA	EAST	1	192	BLK	✓	
15	E.H.R	AREA	EAST	1	192	BLK	✓	
15	E.H.R	AREA	WEST	1	192	BLK	✓	
3RD	SHUTTLE	ELEV	SHAFT	3	049	PEC3	✓	
2ND	E.H.R	H.E.	3+2	3	005	PEC37	✓	
23	E.H.R	AREA	(x2)	1	170	BLK	✓	
	E.H.R	DUCT		2	229	SIF24	✓	

INVOICE TO:
W.T.C
Silverstein Prop.
N.Y.C.

SERVICEMAN ASSIGNED: J. Torres, F. Rohan	SEE AT JOB SITE: F.S.I.
	DATE SCHEDULED: 4-28-01
CONTRACT #: S/C 00818	TYPE OF SYSTEM: CSN 2000
FEE SERVICE #	P.O. #
CALL AUHTORIZED BY	PHONE / EXT

☑ MAINTENANCE ☐ TEST
☐ JOB COMPLETE ☐ JOB INCOMPLETE
☐ SYSTEM ON LINE ☐ SYSTEM OFF LINE

DEPARTED SHOP	TIME IN	TIME OUT	RETURNED SHOP	TOTAL HOURS
AM PM	7:00 AM PM	4:00 AM PM	AM PM	

MATERIAL RECORD

QUANTITY	DESCRIPTION	COST
	PREVENTIVE MAINTENANCE CONTRACT	

CUSTOMER NAME (PRINT)
CUSTOMER SIGNATURE
SERVICEMAN SIGNATURE

AUTHORIZATION FOR FIRE ALARM INTERRUPTION
The undersigned has been advised by Fire Service Inc. representatives that it may be necessary to interrupt the fire protection service by disconnecting the system and/or a component as the performance of their assigned work.
The undersigned hereby assumes the responsibility for the notifications of the authorities at the time the interruption is initiated and will take all of the precautions deemed necessary during the period of interruption and hold harmless Fire Service Inc. and its employees regarding interruption of the fire protection service during their service of the equipment.

TIME
DATE
NAME

SERVICE PERFORMED & REMAINING

S/Controls - Prov. Test Trouble Switch
Detectors: SHAFT 1 - Ok Listed - Assisted By OTIS Mech.
Elec. Hoist Key's (SHAFT 1) - Also Lexan (1) In E.H.R. 31st Fl
Reviewed Alls at Basic Unit - Back to Operation

(A) INACCESSIBLE (B) MISSING (C) DEFECTIVE (D) OTHER

FIRE SERVICE INCORPORATED

94445

SUBSIDIARY OF FIRECOM INC.

39-27 FIFTY NINTH STREET
WOODSIDE, NEW YORK 11377
(718) 899-2311

REPORT OF FIELD SERVICE

INVOICE TO

SERVICED

7WTC
New York, N.Y.

CALL AUTHORIZED BY		CONTRACT #	FEE SERVICE #	FJ #	P.O. #	SEE AT JOB SITE
		S000818				F.S.D
PHONE	EXT	DATE SCHEDULED	TIME SCHEDULED			SERVICEMAN ASSIGNED
		04-28-2001	A.M.			FRANK L.

MATERIAL RECORD

QUANTITY ISSUED	QUANTITY B/O	F.C.I. NO	DESCRIPTION	UNIT PRICE	PER	TOTAL AMOUNT
					PREVENTIVE MAINTENANCE CONTRACT	

CHECK APPROPRIATE BOX

- ☐ Q.C
- ☐ I & T
- ☐ FEE CALL
- ☐ DELIVERY
- ☐ DEMO
- ☐ EMERGENCY CALL
- ☑ CONTRACT CALL
- ☐ PICK UP
- ☐ DEMO OWNER
- ☐ SURVEY

DEPARTED SHOP	TIME IN	TIME OUT	RETURNED SHOP	TOTAL HOURS	START MILEAGE	END MILEAGE	MISC EXPENSE	CAR FARE
	7:00 A.M.	3:00 P.M.						

- ☐ MAT RECD
- ☐ PARTIAL
- ☐ OTHER
- ☐ LABOR RECD

I & T COMPLETE ☐ CALL COMPLETE ☐

SERVICE DATE: 04-28-2001

WILL RETURN ON:

CUSTOMER SIGNATURE: [signature] (ATTACHED)

SERVICEMAN SIGNATURE: [signature]

PROBLEM—AS DESCRIBED

Service Contract

SERVICE PERFORMED

Assisting Tech. Jimmy Lee on the performing of the Service Contract of testing of ~~Cleaning~~ of the Smoke and Heat detectors inside of E.H.C. and Safety elevators. See Service Report #23477

WORK REMAINING

FCI 155
REV 6186

AUTHORIZATION FOR FIRE ALARM INTERRUPTION

The undersigned has been advised by Fire Service, Inc. representative that it may be necessary to interrupt the fire protection service by disconnecting the system and/or a component in the performance of their assigned work.

The undersigned hereby assumes the responsibility for the notification of the authorities at the time the interruption is initiated and will take all of the precautions deemed necessary during the period of interruption and hold harmless Fire Service Inc. and its employees regarding interruption of the protection service during their service of the equipment.

Date

Name

FIRE SERVICE INCORPORATED

97652

SUBSIDIARY OF FIRECOM INC.

39-27 FIFTY NINTH STREET
WOODSIDE, NEW YORK 11377
(718) 899-2311

REPORT OF FIELD SERVICE

INVOICE TO

SERVICED

W.T.C. -
Silverstein Prop. -
N-Y-C

CALL AUTHORIZED BY	CONTRACT #	FEE SERVICE #	F.J #	P.O #	SEE AT JOB SITE
ST.	S/C 00 818				F.J.D

PHONE	EXT.	DATE SCHEDULED	TIME SCHEDULED	SERVICEMAN ASSIGNED
		4-25-01	Any	J. Torres

MATERIAL RECORD

QUANTITY ISSUED	QUANTITY B/O	F.C.I NO	DESCRIPTION	UNIT PRICE	PER	TOTAL AMOUNT
2			BATTERIES 12 VOLT (STROBE PWL)	6995		

PREVENTIVE MAINTENANCE CONTRACT

AUTHORIZATION FOR FIRE ALARM INTERRUPTION

The undersigned has been advised by Fire Service, Inc. representative that it may be necessary to interrupt the fire protection service by disconnecting the system and/or a component in the performance of their assigned work.

The undersigned hereby assumes the responsibility for the notification of the authorities at the time the interruption is initiated and will take all of the precautions deemed necessary during the period of interruption and hold harmless Fire Service Inc. and its employees regarding interruption of the protection service during their service of the equipment.

Date

X

Name

CHECK APPROPRIATE BOX

- ☐ Q.C
- ☐ I & T
- ☐ FEE CALL
- ☐ DELIVERY
- ☐ DEMO
- ☐ EMERGENCY CALL
- ☑ CONTRACT CALL
- ☐ PICK UP
- ☐ DEMO OWNER
- ☐ SURVEY

DEPARTED SHOP	TIME IN	TIME OUT	RETURNED SHOP	TOTAL HOURS	START MILEAGE	END MILEAGE	MISC EXPENSE	CAR FARE
	800	4:30						
	Ay	Pm						

☐ MAT RECD ☐ PARTIAL
☐ OTHER ☐ LABOR RECD

SERVICE DATE: 4-25-01

CUSTOMER SIGNATURE:

I & T COMPLETE ☐ CALL COMPLETE ☐

WILL RETURN ON

SERVICEMAN SIGNATURE:

PROBLEM—AS DESCRIBED SERVICE CONTRACT / REPAIR STROBE PANEL'S - VARIOUS FLOOR'S ALSO TO CHECK PURGE FAN 18" PR. N/G - AS PER F.J.D. -

SERVICE PERFORMED PERFORMED REPAIR ON STROBES PANEL'S - TROUBLE'S / TROUBLESHOOTED REPLACED (6) SET'S OF 12 VOLTS BATTERIES ON FLOORS 7'- 8'- 39" FLOORS AND TESTED / TROUBLE SHOOTED PANEL ON 46" FL. STROBE PWL. - CIRCUIT #2 CLEAN TO HIGH RESISTANCE - TROUBLE CONDITION. - CIRCUIT HOSE ACTIVATED / TRACE UNIT DEFECTIVE PANEL BACK ON LINE. - ALSO CHECK TROUBLESHOOTED 18" PR. PURGE UNIT NOT 'LACKING' ON ALARM CONDITION AT F.C. STATION DISPLAY / AS WELL PRESSURIZATION 17 & 19 FL. - FURTHER CHECK'S LEADS TO ALSO MALFUNCTION ON PURGING 17 & 19" FLOOR'S. - CHECK TTB'S ON 18 FL. UNITS O.K. / P.C.I 792 KEYBOARD / PROBLEM PERSISTENT / F.C. STATION

WORK REMAINING POWER / DOWNLOAD / RESET - PURGING 18 STILL DEFECTIVE. - PROBLEM TO BE CHECK / P500 I.F UNIT AT CONSOLE. -

@ ALSO ASCAPE UNIT (FANS) ON 6" FL NOT DISPLAYING CURRENT EVENT'S

ACCENT BILLING. - STHOUSING ACC BILLING - | RUN TIME ERROR 3021
NO CURRENT RECORD

FCI 155
REV 6186 NOTIFIED HARTY ON FAX / DALE'S DEPT

FIRE SERVICE INCORPORATED

94436

SUBSIDIARY OF FIRECOM INC.

39-27 FIFTY NINTH STREET
WOODSIDE, NEW YORK 11377
(718) 899-2311

REPORT OF FIELD SERVICE

INVOICE TO

SERVICED

TWTC
New York, N.Y.

CALL AUTHORIZED BY	CONTRACT #	FEE SERVICE #	FJ #	PO #	SEE AT JOB SITE
	SC00818				7-S D

PHONE	EXT	DATE SCHEDULED	TIME SCHEDULED	SERVICEMAN ASSIGNED
		4/25/01	A.M.	Frank L.

MATERIAL RECORD

QUANTITY ISSUED	QUANTITY B/O	FCI NO	DESCRIPTION	UNIT PRICE	PER	TOTAL AMOUNT
			PREVENTIVE MAINTENANCE CONTRACT			

CHECK APPROPRIATE BOX

- ☐ Q.C
- ☐ I & T
- ☐ FEE CALL
- ☐ DELIVERY
- ☐ DEMO
- ☐ EMERGENCY CALL
- ☑ CONTRACT CALL
- ☐ PICK UP
- ☐ DEMO OWNER
- ☐ SURVEY

DEPARTED SHOP	TIME IN	TIME OUT	RETURNED SHOP	TOTAL HOURS	START MILEAGE	END MILEAGE	MISC EXPENSE	CAR FARE
	8:00 A.M.	4:30 P.M.						

☐ MAT RECD ☐ PARTIAL
☐ OTHER . ☐ LABOR RECD

SERVICE DATE: 4/25/01

CUSTOMER SIGNATURE:

I & T COMPLETE ☐ CALL COMPLETE ☐

WILL RETURN ON

SERVICEMAN SIGNATURE: Frank Fasani

AUTHORIZATION FOR FIRE ALARM INTERRUPTION

The undersigned has been advised by Fire Service Inc. representative that it may be necessary to interrupt the fire protection service by disconnecting the system and/or a component in the performance of their assigned work.

The undersigned hereby assumes the responsibility for the notification of the authorities at the time the interruption is initiated and will take all of the precautions deemed necessary during the period of interruption and hold harmless Fire Service Inc. and its employees regarding interruption of the protection service during their service of the equipment

Name

Date

PROBLEM—AS DESCRIBED

Service Contract

SERVICE PERFORMED

Assisting Tech Jim Farrey on the repairs of strobe panels on 4th floor, 8th floor, 39th Ave 46th floors. Also on the replacing of batteries on 7th, 8th and 39th floors. Also Assisting on the Checking of Purge and Pressurization of the 18th floor. See Service Request # 97652.

WORK REMAINING

FCI 155
REV 6/88

FIRE SERVICE INCORPORATED

23476

Subsidiary of Firecom, Inc.
39-27 Fifty Ninth Street
Woodside, New York 11377
(718) 899-2311

REPORT OF FIELD SERVICE

LOCATIONS | **DEVICES**

FLOOR	AREAS			CABLE	XTNDR	S/D	TST CLEAN
42	PASS/FREIGHT		(2)	2	019	BRK	✓
	ELECT	A-B	(2)	2	211	BLK	✓
	COMM	A-B	(2)	2	211	BLK	✓
	TELEPH	A-B	(2)	2	211	BLK	✓
	SUPV	'C'		2	210	Apollo	✓
	TOWER	'C'		2	210	Apollo	✓
	ELECT	C		2	210	Apollo	✓
	BOAT	D		2	210	Apollo	✓
42	CORE	HELP AREA	(2)	2	212	Apollo	✓
42	CORE	MEN'S R/D	(2)	2	017	Apollo	✓
	SHUTTLE	ELEV.	PASS	4	008	PEC3B	✓
	ELECT	D		2	210	Apollo	✓
	COMM/STAIR	'D'	FTB	2	210	PEC3	✓
42	'G'	ELECT/SER.	(2)	4	080	PEC3	✓
43	PASS	FREIGHT	(2)	2	020	BLK	✓
	ELECT	A-B	(2)	2	213	BLK	✓
	TELEPH	A-B	(2)	2	213	BLK	✓
	COMM	A-B	(2)	2	213	BLK	✓
	COMM	C-D	(2)	2	212	BLK	✓
	TELEPH	C-D	(2)	2	212	BLK	✓
	ELECT	C-D	(2)	2	212	BLK	✓
	CORE	HELP AREA	2	2	253	Apollo	✓
	(BREAK R/D)		2	2	018	Apollo	✓
	ELECT	G		4	081	BLK	✓
43	SECURITY			4	081	PEC3T	✓
	SHUTTLE	ELEV.	PASS	4	009	PEC3	✓
43	'F'	ELECT	NO S/D IN PREMISES. —				

INVOICE TO: 7W.T.C. (SOLOMON BROTHERS N.Y.C. -)

SERVICEMAN ASSIGNED	SEE AT JOB SITE
J. TORRES	F.S.I.
	DATE SCHEDULED: 4-24-01
CONTRACT # S/C00818	TYPE OF SYSTEM: LSN 2000
FEE SERVICE #	P.O. #
CALL AUHTORIZED BY	PHONE / EXT

☑ MAINTENANCE ☐ TEST
☐ JOB COMPLETE ☑ JOB INCOMPLETE
☐ SYSTEM ON LINE ☐ SYSTEM OFF LINE

DEPARTED SHOP	TIME IN	TIME OUT	RETURNED SHOP	TOTAL HOURS
AM PM	800 AM PM	430 AM PM	AM PM	

MATERIAL RECORD

QUANTITY	DESCRIPTION	COST
4	BATTERIES 12 VOLTS	69.95
	(STROBE P/C'S)	
	PREVENTIVE MAINTENANCE CONTRACT	

CUSTOMER NAME (PRINT)
CUSTOMER SIGNATURE
SERVICEMAN SIGNATURE

AUTHORIZATION FOR FIRE ALARM INTERRUPTION
The undersigned has been advised by Fire Service Inc. representative that it may be necessary to interrupt the fire protection service by disconnecting the system and/or a component in the performance of their assigned work.
The undersigned hereby assumes the responsibility for the malfunction of the authorities at the time the interruption is initiated and will take all of the precautions deemed necessary during the period of interruption and hold harmless Fire Service Inc. and its employees regarding interruption of fire protection service during their service of the equipment.

NAME _____ DATE _____ TIME _____

SERVICE PERFORMED & REMAINING: SERVICE CONTRACT PREV. MAINT. on SMOKE DETECTORS On FLOORS 43 & 42ND AT LISTED ABOVE. - DEFICIENCY BATTERIES. — 42ND FL. FREIGHT ELEV. UNIT - POOR SENS. NEED TO BE REPLACED. — TO CONTINUE. - SYSTEM BACK IN OPERATION — 43'F.I.

(A) 'F' ELECT closet - S/D (MISSING) / NEED UNIT to BE WIRED / INSTALLED.

(A) INACCESSIBLE (B) MISSING (C) DEFECTIVE (D) OTHER

(B) BATTERIES to BE Replaced on 7 + 8TH FL. - STROBE P/C's. —

FIRE SERVICE INCORPORATED

94437

SUBSIDIARY OF FIRECOM INC.

39-27 FIFTY NINTH STREET
WOODSIDE, NEW YORK 11377
(718) 899-2311

REPORT OF FIELD SERVICE

INVOICE TO

SERVICED

Tate
New York, N.Y.

CALL AUTHORIZED BY	CONTRACT #	FEE SERVICE #	F.J.#	P.O. #	SEE AT JOB SITE
	SC00818				F.S.D.
PHONE / **EXT.**	**DATE SCHEDULED**	**TIME SCHEDULED**			**SERVICEMAN ASSIGNED**
	4/24/01	P.M.			Frank R.

MATERIAL RECORD

QUANTITY ISSUED	QUANTITY B/O	F C I NO	DESCRIPTION	UNIT PRICE	PER	TOTAL AMOUNT
			PREVENTIVE MAINTENANCE CONTRACT			

CHECK APPROPRIATE BOX

- ☐ Q. C
- ☐ I & T
- ☐ FEE CALL
- ☐ DELIVERY
- ☐ DEMO
- ☐ EMERGENCY CALL
- ☒ CONTRACT CALL
- ☐ PICK UP
- ☐ DEMO OWNER
- ☐ SURVEY

DEPARTED SHOP	TIME IN	TIME OUT	RETURNED SHOP	TOTAL HOURS	START MILEAGE	END MILEAGE	MISC EXPENSE	CAR FARE
	8:00 AM	4:30 P.M.						

- ☐ MAT REQD ☐ PARTIAL
- ☐ OTHER ☐ LABOR REQD

SERVICE DATE: 4/24/01

WILL RETURN ON:

I & T COMPLETE ☐ CALL COMPLETE ☐

CUSTOMER SIGNATURE: Frank Lepis

SERVICEMAN SIGNATURE: Frank Lepis

AUTHORIZATION FOR FIRE ALARM INTERRUPTION

The undersigned has been advised by Fire Service, Inc. representative that it may be necessary to interrupt the fire protection service by disconnecting the system and/or a component in the performance of their assigned work.

The undersigned hereby assumes the responsibility for the notification of the authorities at the time the interruption is initiated and will take all of the precautions deemed necessary during the period of interruption and hold harmless Fire Service Inc. and its employees regarding interruption of the protection service during their service of the equipment.

Name

Date

PROBLEM—AS DESCRIBED

Service Contract

SERVICE PERFORMED

Inspecting Testing Tower, See Note
Performing of the Service Contract
Cleaning and Testing of the Area
Smoke Detectors and Heat Detectors
See 43rd and 42nd Floors
See Service report #23476.

WORK REMAINING

FCI 155
REV 6186

FIRE SERVICE INCORPORATED

77450

SUBSIDIARY OF FIRECOM INC.
39-27 FIFTY NINTH STREET
WOODSIDE, NEW YORK 11377
(718) 899-2311

REPORT OF FIELD SERVICE

INVOICE TO

SERVICED

7WTC
New York, N.Y.

CALL AUTHORIZED BY	CONTRACT #	FEE SERVICE #	FJ #	P O #	SEE AT JOB SITE
	Sc00818				F.S.D.
PHONE / **EXT**	**DATE SCHEDULED**	**TIME SCHEDULED**			**SERVICEMAN ASSIGNED**
	4/21/01	AM.			Frank L.

MATERIAL RECORD

QUANTITY ISSUED	QUANTITY B/O	FCI NO	DESCRIPTION	UNIT PRICE	PER	TOTAL AMOUNT
					PREVENTIVE MAINTENANCE CONTRACT	

CHECK APPROPRIATE BOX

- ☐ O.C
- ☐ I & T
- ☐ FEE CALL
- ☐ DELIVERY
- ☐ DEMO
- ☐ EMERGENCY CALL
- ☑ CONTRACT CALL
- ☐ PICK UP
- ☐ DEMO OWNER
- ☐ SURVEY

DEPARTED SHOP	TIME IN	TIME OUT	RETURNED SHOP	TOTAL HOURS	START MILEAGE	END MILEAGE	MISC EXPENSE	CAR FARE
	7:00 AM	3:30 PM						

- ☐ MAT RECD ☐ PARTIAL
- ☐ OTHER ☐ LABOR RECD

I & T COMPLETE ☐ CALL COMPLETE ☐

SERVICE DATE: 4/21/01

WILL RETURN ON:

CUSTOMER SIGNATURE: (Roman)

SERVICEMAN SIGNATURE: Frank Fiorino

AUTHORIZATION FOR FIRE ALARM INTERRUPTION

The undersigned has been advised by Fire Service, Inc. representative that it may be necessary to interrupt the fire protection service by disconnecting the system and/or a component in the performance of their assigned work.

The undersigned hereby assumes the responsibility for the notification of the authorities at the time the interruption is initiated and will take all of the precautions deemed necessary during the period of interruption and hold harmless Fire Service Inc. and its employees regarding interruption of fire protection service during their service of the equipment.

Date

Name

PROBLEM—AS DESCRIBED

Service Contract

SERVICE PERFORMED

Assisting Temperature Tech. on the Cleaning and Testing of the Smoke and Heat Detectors, per the Elevator Motor Room and Elevator Shafts from 48th Floor Down to 43rd Floor.

See report #23475

WORK REMAINING

FCI 155
REV 6188

FIRE SERVICE INCORPORATED

: 23475

Subsidiary of Firecom, Inc.
39-27 Fifty Ninth Street
Woodside, New York 11377
(718) 899-2311

REPORT OF FIELD SERVICE

LOCATIONS | **DEVICES**

FLOOR				CAN/E	XTNDR	S/D	CRAWTEST
48	ROOF	E.H.R	CAN. 31	2	226	BNK	✓
47	SHUTTLE	ELEV. SHAFT		4	037	PEC3T	✓
47	SHUTTLE	ELEV. SHAFT		4	037	PEC3T	✓
47	E.H.R /	AREA	CAN 29-30	2	224	BNK	✓
47	ELEV. SHAFT	CAN: 44/47		4	037	PEC3T	✓
	BANK	H - SHUTTLE.	—				
47	E.H.R	CAN 3	21-28	2	220	BNK	✓
47	E.H.R	AREA	21-28	2	220	BNK	✓
47	E.H.R	AREA	21-28	2	220	BNK	✓
47	E.H.R	AREA	21-28	2	220	BNK	✓
47	E.H.R	AREA	21-28	2	220	BNK	✓
47	E.H.R	AREA	21-28	2	220	BNK	✓
46	KITCHEN	SHUTTLE	CAN 38	4	036	PEC3T	✓
	SHAFT /	BANK K —	(PIPE)				
46	FREIGHT	SHUTTLE	H.K.E-1 AREA. E.H.R		CAN 38		
	BANK J	—		4	036	PEC3T	✓
47	E.H.R	AREA -	32-33	4	067	PEC3T	✓
46	E.H.R	H.K.E-1	AREA	4	065	PEC3T	✓
	CAN'S 2-3						
46	E.H.R	H.K.E-1.	AREA	4	066	PEC3	✓
	BANK J	CAN 37					
46	SHAFT	SHUTTLE	CAN. 37	4	036	PEC3T	✓
	BANK J.	CAN 37					
43	E.H.R	AREA	61-2	4	064	PEC3	✓
	CAN'S	34-35	BATH ENT./LADIES —				

INVOICE TO:
T.W.T.C.
SILVERSTEIN PROP.
N.Y.C.

SERVICEMAN ASSIGNED: L. TORRES, F. ROSALIU	SEE AT JOB SITE: F.S.I.
	DATE SCHEDULED: SAT 4-21-01
CONTRACT #: S/C 00818	TYPE OF SYSTEM: LSN 2000
FEE SERVICE #	P.O. #
CALL AUHTORIZED BY	PHONE / EXT

☒ MAINTENANCE ☒ TEST
☐ JOB COMPLETE ☐ JOB INCOMPLETE
☐ SYSTEM ON LINE ☐ SYSTEM OFF LINE

DEPARTED SHOP	TIME IN	TIME OUT	RETURNED SHOP	TOTAL HOURS
AM / PM	7:30 AM / PM	3:30 PM / PM	AM / PM	

MATERIAL RECORD

QUANTITY	DESCRIPTION	COST
	PREVENTIVE MAINTENANCE CONTRACT	

CUSTOMER NAME (PRINT)
CUSTOMER SIGNATURE — ATTMED
SERVICEMAN SIGNATURE

AUTHORIZATION FOR FIRE ALARM INTERRUPTION
The undersigned has been advised by Fire Service Inc. representative that it may be necessary to interrupt the fire protection service by disconnecting the system and/or a component in the performance of their assigned work.
The undersigned hereby assumes the responsibility for the notification of the authorities at the time the interruption is initiated and will take all of the precautions deemed necessary during the period of interruption and hold harmless Fire Service Inc. and its employee regarding interruption of the protection service during their service of the equipment.

TIME _____ DATE _____ NAME _____

SERVICE PERFORMED & REMAINING: SERVICE CONTRACT - PREVENTIVE MAINTENANCE SMOKE DETECTION SYSTEM / UNIT BY ELEVATOR'S SHAFTS & ELEV. MOTOR RM'S ASISTED BY OTIS MECH (BOB) — UNITS TESTED / CLEANED / MONITORED / RESET AT F.C. STATION OUTPUT - NORMAL - SYSTEM BACK IN OPERATION. — TO BE CONTINUE.

(A) INACCESSIBLE (B) MISSING (C) DEFECTIVE (D) OTHER

FIRE SERVICE INCORPORATED

23474

Subsidiary of Firecom, Inc.
39-27 Fifty Ninth Street
Woodside, New York 11377
(718) 899-2311

REPORT OF FIELD SERVICE

LOCATIONS			DEVICES				
FLOOR	AREA			CABLE	X/NODE	S/D	TEST CHART
38	W. HER. AREA			4	028	PEC 3T	✓
	W. HER. D/D			4	0100	HOWARD	✓
	ELECT	A-B	(2)	2	202	BLK	✓
	TELEPH	A-B	(1)	2	202	BLK	✓
	COMM	A-B	(2)	2	202	BLK	✓
	ELECT	C		2	203	BLK	✓
	ELECT	D		2	203	BLK	✓
	ELECT	D.W.		2	203	EDWDS	✓
	ELECT	F		4	052	PEC 3	✓
	ELECT	G		4	076	PEC 3	✓
	SECURITY			4	076	PEC 3	✓
	PASS/FREIGHT ELEV.		(2)	2	015	BLK	✓
	ELEV. SHUTTLE			4	004	PEC 3	✓
	CORE HER AREA		(3)	2	004	PEC 3T	✓
	CORE AREA D/D		(2)	2	005	HOWARD	✓
	W. HER AUDITY AREA			4	046	PEC 3T	✓
	W. HER D/D AUDITY			4	127	EDWDS	✓
39	ELECT	A-B	(2)	2	205	BLK	✓
	COMM	A-B	(2)	2	205	BLK	✓
	TELEPH	A-B	(2)	2	205	BLK	✓
	ELECT	C		2	204	BLK	
	ELECT	D.W		2	204	BLK	
	ELECT	DF		2	053	PEC 3	
	ELECT	G		4	077	PEC 3	
	SECURITY CLOSET			4	077	PEC 3	
	ELECT	D1		2	204	BLK	
	FREIGHT/PASS ELEV		(2)	2	016	BLK	
	ELEV. SHUTTLE			4	005	PEC 3	
	RECP. CEILING D/D		(2)	2	254	APOLLO	
	RECP. CEILING D/D/SMK		(3)	2	254	APOLLO	
	CORE HER AREA		(3)	2	006	PEC 3	
	CORE D/DET.		(2)	2	007	HOWARD	
	W. HER AREA			4	029	PEC 3T	
	W. HER. D/D.			4	101	EDWDS	

INVOICE TO: T. W. T. C.
(SOLOMON/SMITH BARNEY)
N.Y.C.

SERVICEMAN ASSIGNED	SEE AT JOB SITE
J. TORRES	F.S.I.
C. TABARES	DATE SCHEDULED 4-18-01
CONTRACT # S/C 00818	TYPE OF SYSTEM CSN 2000
FEE SERVICE #	P.O. #
CALL AUHTORIZED BY	PHONE / EXT

☒ MAINTENANCE ☐ TEST
☐ JOB COMPLETE ☐ JOB INCOMPLETE
☐ SYSTEM ON LINE ☐ SYSTEM OFF LINE

DEPARTED SHOP	TIME IN	TIME OUT	RETURNED SHOP	TOTAL HOURS
AM/PM	8:00 AM	4:30 PM	AM/PM	

AUTHORIZATION FOR FIRE ALARM INTERRUPTION
The undersigned has been advised by Fire Service Inc. representatives that it may be necessary to interrupt the fire protection service by disconnecting the system and/or a component in the performance of their assigned work.
The undersigned hereby assumes the responsibility for the notification of the authorities at the time the interruption is initiated and will take all of the precautions deemed necessary during this period of interruption and hold harmless Fire Service Inc. and its employees regarding interruption of the protection service during this service of the equipment.

NAME DATE TIME

MATERIAL RECORD

QUANTITY	DESCRIPTION	COST
	PREVENTIVE MAINTENANCE CONTRACT	

CUSTOMER NAME (PRINT) SILVERSTEIN
CUSTOMER SIGNATURE
SERVICEMAN SIGNATURE

SERVICE PERFORMED & REMAINING: SERV. CONTRACT - PREV. MAINT. SMOKE DETECTION (SOLOMON) FLOOR'S 39 & 38' AS LISTED ALL AREA CLOSET'S. SYSTEM ACK/RESET'S. - AT F.C. STATION. - BACK TO NORMAL OPERATION. -

(W) ALSO CHECK AS PER F.S.I. STROBE (PNL) 7th & 8th FL. BATTERY CONDITION. - FOUND TO LOW BATTERIES 12VLT/12AH. TO BE REPLACED (2) SET'S. -

(A) INACCESSIBLE (B) MISSING (C) DEFECTIVE (D) OTHER

FIRE SERVICE INCORPORATED

23470

Subsidiary of Firecom, Inc.
39-27 Fifty Ninth Street
Woodside, New York 11377
(718) 899-2311

REPORT OF FIELD SERVICE

LOCATIONS				DEVICES				
FLOOR				Panel	Zone	S/D	Test Clean	
44	ELECT	A		2	215	BLK	✓	
	COMM	A		2	215	BLK	✓	
	TELEPH	A		2	215	BLK	✓	
	PASS	ELEV.		2	021	BLK	✓	
	ELECT	B		2	215	BLK	✓	
	COMM	B		2	215	BLK	✓	
	TELEPH	B		2	215	BLK	✓	
44	FREIGHT	ELEV.		2	021	BLK	✓	
	ELECT	G		4	082	PEC3	✓	
	SECURITY	CLOSET		4	082	PEC3	✓	
	SHUTTLE	ELEV.		4	010	PEC3	✓	
	SHUTTLE	ELEV.		2	018	PEC3	✓	
	WEST	FAN RM	D/D	4	112	ESTANS	✓	
	WEST	FAN RM	AREA	4	034	PEC3T	✓	
44	ELECT	F		4	058	PEC3	✓	
2ND	ELECT	D		1	163	BLK	✓	
2ND	FRONT	ENT - HIGH CEILING		1	163	BLK	✓	
2ND	"	"	"	1	163	BLK	✓	
2ND	"	"	"	1	163	BLK	✓	
2ND	"	"	"	1	163	BLK	✓	
2ND	FRONT	ENT.	ESCALATOR'S	1	163	BLK	✓	
	●	●	●	●	[illegible]	[illegible]	●	
2ND	HALLWAY	DISPLAY	LOBBY	1	163	BLK	✓	
	"	"	"	1	163	BLK	✓	
2ND	FAN RM	EAST	D/D	1	270	HOCHIKI	✓	
1ST	FREIGHT	ELEV.		1	000	PEC3	✓	
	PUMP RM		(2)	1	160	BLK	✓	
	ELECT	A		1	160	BLK	✓	
	TRASH	RM/LOUNGE		1	160	PEC3T	✓	
	HANDICAP	ELEV	LOBBY	1	000	BLK	✓	
1ST	LOW CEILING	LOBBY	(2)	1	161	BLK	✓	
	1ST ELECT	D		1	161	BLK	✓	

INVOICE TO:
J.W.T.C.
SILVERSTEIN PROP.
N-Y-C.

SERVICEMAN ASSIGNED: L. TORRES / F. POSADA
SEE AT JOB SITE: F.J.
DATE SCHEDULED: 4-11-01
CONTRACT #: SK00818
TYPE OF SYSTEM: LSN2000
FEE SERVICE #:
P.O. #:
CALL AUHTORIZED BY:
PHONE:
EXT:

☒ MAINTENANCE ☒ TEST
☐ JOB COMPLETE ☐ JOB INCOMPLETE
☐ SYSTEM ON LINE ☐ SYSTEM OFF LINE

AUTHORIZATION FOR FIRE ALARM INTERRUPTION
The undersigned has been advised by Fire Service Inc. representative that it may be necessary to interrupt the fire protection service by disconnecting the system and/or a component in the performance of their assigned work.
The undersigned hereby assumes the responsibility for the notification of the authorities at the time the interruption is initiated and will take all of the precautions deemed necessary during the period of interruption and hold harmless Fire Service Inc. and its employees regarding interruptions of the protection service during their service of the equipment.

NAME / DATE / TIME

DEPARTED SHOP	TIME IN	TIME OUT	RETURNED SHOP	TOTAL HOURS
AM PM	8:00 AM PM	4:30 PM	AM PM	

MATERIAL RECORD

QUANTITY	DESCRIPTION	COST
	PREVENTIVE MAINTENANCE CONTRACT	

CUSTOMER NAME (PRINT): SILVERSTEIN
CUSTOMER SIGNATURE:
SERVICEMAN SIGNATURE: Frank Posada

SERVICE PERFORMED & REMAINING

SERVICE CONTRACT / PREV. MAINTENANCE SMOKE DETECTION UNITS ON 44TH QUAD 2ND / 1ST FL. LOBBIES AS LISTED ABOVE (SILVERSTEIN ACCT.) —
USED OF "GENIE BOOM" TO REACH HIGH CEILING LOBBY ENTRANCE. —
SYSTEM OKAY RESET BACK TO OPERATION. —

(A) INACCESSIBLE (B) MISSING (C) DEFECTIVE (D) OTHER

FIRE SERVICE INCORPORATED

23468

Subsidiary of Firecom, Inc.
39-27 Fifty Ninth Street
Woodside, New York 11377
(718) 899-2311

REPORT OF FIELD SERVICE

LOCATIONS | **DEVICES**

FLOOR	AREA'S		CABLE	ZONE	S/D	TST/CLEAN
47	STAIR 'A' - ELEV.		2	024	BLK	✓
	ELEV. SHUTTLE		4	016	PEC3T	✓
	SECURITY CLOSET		4	085	PEC3	✓
	ELECT 'G'		4	085	PEC3	✓
	ELECT A		2	222	BLK	✓
	ELECT B		2	222	BLK.	✓
	ELECT 'C'		2	223	BLK	✓
	ELECT F		4	061	PEC3	✓
	TELEPH B		2	222	BLK	✓
	'B' STAIRWAY (LANDING)		2	221	EDWDS	✓
	TELEPH 'A'		2	222	BLK	✓
	COMM D		2	223	BLK	✓
	CUSHMAN OFFICE AREA		4	113	EDWDS	✓
	SHAFT VERTICAL CONV.		4	068	EDWDS	✓
	W. MER		4	069	EDWDS	✓
	W. MER D/D 47-1		4	115	EDWDS	✓
	CORE MER D/D		2	023	[illegible]	✓
	POLE MER AREA (3)		2	022	PEC3	✓
46	FREIGHT ELEV. X64		2	023	BLK	✓
	ELEV. SHUTTLE 'F'		4	014	PEC3	✓
	ELEV. SHUTTLE 'H'		4	015	PEC3	✓
	KITCHEN SHUTTLE ELEV		4	013	PEC3	✓
	ELECT 'G'/SEC. (2)		4	084	PEC3	✓
	ELECT B		2	218	BLK	✓
	COMM B		2	218	BLK	✓
	ELECT A		2	218	BLK	✓
	COMM A		2	218	BLK	✓
	TELEPH A		2	218	BLK	✓
	TELEPH D		2	219	BLK	✓
	ELECT D		2	219	BLK	✓
	COMM D		2	219	BLK	✓
	CORE MER D/D (2)		2	021	ADDRE.	✓
	POLE MER AREA (3)		2	020	PEC3	✓
	ELECT F		4	060	PEC3	✓
	ELECT C		2	219	PEC3	✓

INVOICE TO: W.T.C. Prop. Silverstein Prop. N.Y.C.

SERVICEMAN ASSIGNED: J. TORRES, F. ROSARIO	SEE AT JOBSITE 7.5.1
	DATE SCHEDULED 4-10-01
CONTRACT # S/C00 818	TYPE OF SYSTEM LSN 2000
FEE SERVICE #	PO #
CALL AUHTORIZED BY	PHONE / EXT

☒ MAINTENANCE ☒ TEST
☐ JOB COMPLETE ☐ JOB INCOMPLETE
☐ SYSTEM ON LINE ☐ SYSTEM OFF LINE

DEPARTED SHOP	TIME IN	TIME OUT	RETURNED SHOP	TOTAL HOURS
AM/PM	9:30 AM/PM	4:30 AM/PM	AM/PM	

MATERIAL RECORD

QUANTITY	DESCRIPTION	COST
	PREVENTIVE MAINTENANCE CONTRACT	

CUSTOMER NAME (PRINT): SILVERSTEIN
CUSTOMER SIGNATURE
SERVICEMAN SIGNATURE

SERVICE PERFORMED & REMAINING: Service Contract — Prev. Maintenance Smoke Detection Units - Class E System — on Floors 47 - 46 - Areas / Locations as Listed Above. — Equip / Ack / Reset properly. —

(A) INACCESSIBLE (B) MISSING (C) DEFECTIVE (D) OTHER

AUTHORIZATION FOR FIRE ALARM INTERRUPTION
The undersigned has been advised by Fire Service Inc. representative that it may be necessary to interrupt the fire protection service by disconnecting the system and/or components in the performance of the assigned work.
The undersigned hereby assumes the responsibility for the notification of the authorities at the time the interruption is initiated and will take all of the precautions deemed necessary during the period of interruption and hold harmless Fire Service Inc. and its employees regarding interruption of the protection service during that service of the equipment.

NAME DATE TIME

FIRE SERVICE INCORPORATED

23465

Subsidiary of Firecom, Inc.
39-27 Fifty Ninth Street
Woodside, New York 11377
(718) 899-2311

REPORT OF FIELD SERVICE

LOCATIONS			DEVICES			
FLOOR	Area/I.		S/D	Cnxk	XTNGR	Test Clean
6	Switchgear	Vault	BRK	1	171	✓
	"	"	BRK	1	171	✓
	"	"	BRK	1	171	✓
	"	"	BRK	1	171	✓
	"	"	BRK	1	171	✓
	High Voltage	Vault	BRK	1	171	✓
6	High Voltage	Vault	(x4) BRK	1	171	✓
	"	"	(4) BRK	1	171	✓
	"	"	(4) BRK	1	171	✓
5	H.V. Vault	(x6)	BRK	1	170	✓
5	H.V. Vault	(x6)	BRK	1	170	✓
5	Switch Gear	North	BRK	1	170	✓
	Switch Gear	North	BRK	1	170	✓
	Switch Gear	North	BRK	1	170	✓
5	Switch Gear	South	BRK	1	170	✓
	Switch Gear	South	BRK	1	170	✓
18	Core Hdr	Stroke Pnl	Acc to	Note		✓
	(2) Batteries Replaced/each.					
	Trouble Unit back in order					

PREVENTIVE MAINTENANCE CONTRACT

INVOICE TO:
J.W.T.C.
Silverstein Prop.
N.Y.C.

SERVICEMAN ASSIGNED: J. Torres	SEE AT JOB SITE: F.S.I.
	DATE SCHEDULED: 4-4-01
CONTRACT #: S/C 00818	TYPE OF SYSTEM: LW2000
FEE SERVICE #	P.O. #
CALL AUHTORIZED BY	PHONE / EXT

☒ MAINTENANCE ☒ TEST
☐ JOB COMPLETE ☐ JOB INCOMPLETE
☐ SYSTEM ON LINE ☐ SYSTEM OFF LINE

DEPARTED SHOP	TIME IN	TIME OUT	RETURNED SHOP	TOTAL HOURS
AM / PM	8:00 AM / PM	4:30 PM / PM	AM / PM	

MATERIAL RECORD

QUANTITY	DESCRIPTION	COST
2	Batteries 12 Volt Pkg	69.95
	(Stroke Pnl)	

AUTHORIZATION FOR FIRE ALARM INTERRUPTION
The undersigned has been advised by Fire Service Inc. representative that it may be necessary to interrupt the fire protection service by disconnecting the system and/or a component in the performance of their assigned work.
The undersigned hereby assumes the responsibility for the notification of the authorities at the time the interruption is initiated and will take all of the precautions deemed necessary during the period of interruption and hold harmless Fire Service Inc. and its employees regarding interruption of the protection service during their service of the equipment.

NAME _____ DATE _____ TIME _____

CUSTOMER NAME (PRINT): Silverstein
CUSTOMER SIGNATURE: [signature]
SERVICEMAN'S SIGNATURE: [signature]

SERVICE PERFORMED & REMAINING

Prev. Maintenance Smoke Detection Silverstein Assoc Only on 6th/5th Fl. Gas Lights (High Voltage Vaults - Escorted Persons) Also Repairs done on 18th Stroke Pnl. (10) Batteries

(A) INACCESSIBLE Replaced O.K. (B) MISSING (C) DEFECTIVE (D) OTHER

FIRE SERVICE INCORPORATED

23466

Subsidiary of Firecom, Inc.
39-27 Fifty Ninth Street
Woodside, New York 11377
(718) 899-2311

REPORT OF FIELD SERVICE

LOCATIONS		DEVICES				
FLOOR	AREA'S.		CABLE	XTN/R	S/D	ALARM TEST
3RD	HALLWAY TOP ESCALATR		1	166	BLK	✓
	HALLWAY TOP ESCALATR		1	166	BLK	✓
	TELEP	A	1	166	BLK	✓
	COMM	A	1	166	BLK	✓
	ELECT	A	1	166	BLK	✓
	COMM	B	1	166	BLK	✓
	COMM/ELEC	B	1	166	BLK	✓
3	FREIGHT ELEV LOBBY		1	0021	BLK	✓
	PASS ELEV. LOBBY (2-13-14-4)			002	BLK	✓
	ELEV. MID RISE (22-28)		1	166	BLK	✓
	ELEV. HIGH RISE (36-45)		1	166	BLK	✓
	ELEV MID RISE (22-28)		1	0021	BLK	✓
	(REPAIRS/RESET'S TAMPERS)					
45	TAMPER S/W		2	147		✓
	ALARM/RESETED.		ADJUSTED.			
42	TAMPER S/W		2	139		✓
	ALARM/RESETED ADJUSTED.					
40	TAMPER S/W		2	137		✓
	TROUBLE/SERVICED (WIRING BROKEN)					—
37	TAMPER S/W		2	135		✓
	ALARM/RESETED ADJUSTED.					
20	TAMPER S/W		2	143		✓
	ALARM/RESETED/ADJUSTED.					—

INVOICE TO: T.W.T.C.

N.Y.C.

SERVICEMAN ASSIGNED: J. TOLLER / F. ROSARIO	SEE AT JOB SITE: F.S.I.
	DATE SCHEDULED: 4-3-01
CONTRACT #: S/C00818	TYPE OF SYSTEM: LSH 2000
FEE SERVICE #	P.O. #
CALL AUHTORIZED BY	PHONE / EXT

☒ MAINTENANCE ☒ TEST

☐ JOB COMPLETE ☐ JOB INCOMPLETE

☐ SYSTEM ON LINE ☐ SYSTEM OFF LINE

DEPARTED SHOP	TIME IN	TIME OUT	RETURNED SHOP	TOTAL HOURS
AM / PM	800 AM / PM	430 AM / PM	AM / PM	

MATERIAL RECORD

QUANTITY	DESCRIPTION	COST
	PREVENTIVE MAINTENANCE CONTRACT	

CUSTOMER NAME (PRINT): SILVERSTEIN

CUSTOMER SIGNATURE

SERVICEMAN SIGNATURE

AUTHORIZATION FOR FIRE ALARM INTERRUPTION
The undersigned has been advised by Fire Service Inc. representative that it may be necessary to interrupt the fire protection service by disconnecting the system and/or a component in the performance of their assigned work.
The undersigned hereby assumes the responsibility for the notifications of the authorities at the time the interruption is initiated and will take all of the precautions deemed necessary during the period of interruption and hold harmless Fire Service Inc. and its employees regarding interruption of the protection service during their service of the equipment.

TIME

DATE

NAME

SERVICE PERFORMED & REMAINING: SERVICE CONTRACT PREVENTIVE MAINTENANCE ON SPRINKLER UNITS FLOOR'S 3RD (SILVERSTEIN AREA) - ONLY. - ALSO ADJUSTED ALARM/RESETED ON TAMPER S/W ON MAIN (CUTOFF VALVE) "B" RISER ONLY - DISRUPTED. - UNITS BACK ON SERVICE. -

(A) INACCESSIBLE (B) MISSING (C) DEFECTIVE (D) OTHER

FIRE SERVICE INCORPORATED

Subsidiary of Firecom, Inc.
39-27 Fifty Ninth Street
Woodside, New York 11377
(718) 899-2311

11842

REPORT OF FIELD SERVICE

LOCATIONS | **DEVICES**

FLOOR	AREAS/ZONES	CODE	XMTR#	S/D	TST/CLEAN
23	PASS ELEV.	2	000	BRK	✓
	CORR B	2	169	BRK	✓
	ELECT B	2	169	BRK	✓
	TELEPH B	2	169	BRK	✓
	ELECT A	2	169	BRK	✓
	CORR A	2	169	BRK	✓
	TELEPH A	2	169	BRK	✓
	CORE MECH D/D.	2	228	HOCHIKI	✓
	CORE MECH D/D	2	228	HOCHIKI	✓
	ELECT C	2	168	BRK	✓
	CORR C	2	168	BRK	✓
	TELEPH C	2	168	BRK	✓
	TELEPH ELEV	2	000	BRK	✓
	CORR D	2	168	BRK	✓
	ELECT D	2	168	BRK	✓
	TELEPH D	2	168	BRK	✓
	RETURN D/D LADIES	2	227	HOCHIKI	✓
*	RETURN D/D MENS	N/A - AS PREVIOUS			
*	RETURN D/D. SOUTH (SILVERSTEIN AREA)	N/A - AS PREVIOUS			
5	FAN RM - STEAM RM D/D	223	HOCHIKI	✓	
5	FAN RM DUCT DET.	1	224	HOCHIKI	✓
5	FAN RM D/DET.	1	228	HOCHIKI	✓
5	FAN RM D/DET	1	267	HOCHIKI	✓
	As Request / Notify = Silverstein D. Chapell. Schanon				
32	CHECK TEST AUDIO VISUAL / CORR. DEVICES				
33	" " " "				
	AS Mr Pamplin Request / P.A. TEST. audibility (DEVICES) INTENSITY. —				

INVOICE TO:
W.T.C. Prop.
Silverstein Prop.
N.Y.C.

SERVICEMAN ASSIGNED	SEE AT JOB SITE
F. Torres	F.S.I.
F. Rosario	DATE SCHEDULED 3-28-01
CONTRACT # S/C00818	TYPE OF SYSTEM LSN 2000
FEE SERVICE #	P O #
CALL AUHTORIZED BY	PHONE / EXT

☒ MAINTENANCE ☐ TEST
☐ JOB COMPLETE ☐ JOB INCOMPLETE
☐ SYSTEM ON LINE ☐ SYSTEM OFF LINE

DEPARTED SHOP	TIME IN	TIME OUT	RETURNED SHOP	TOTAL HOURS
AM PM	8:00 AM PM	4:30 AM PM	AM PM	

MATERIAL RECORD

QUANTITY	DESCRIPTION	COST
	PREVENTIVE MAINTENANCE CONTRACT	

CUSTOMER NAME (PRINT) Sean O'Keeffe
CUSTOMER SIGNATURE
SERVICEMAN SIGNATURE

AUTHORIZATION FOR FIRE ALARM INTERRUPTION
The undersigned has been advised by Fire Service Inc. representative that it may be necessary to interrupt the fire protection service by disconnecting the system and/or a component in the performance of their assigned work.
The undersigned hereby assumes the responsibility for the notification of the authorities at the time the interruption is initiated and will take all of the precautions deemed necessary during this period of interruption and hold harmless Fire Service Inc. and its employees regarding interruption of fire protection service during their service of the equipment.

NAME DATE TIME

SERVICE PERFORMED & REMAINING
S/CONTRACT — PREV. MAINTENANCE ON SMOKE DETECTION SYSTEM - CLASS E DEVICES LOCATED BY CLOSET'S AHAU CORE MECH. DUCT UNIT - ELEVATOR LOBBYES GO LISTED. — ALSO ASISTED BUILDING / SOLOMON BROTHERS REQUEST P.A. TEST AUDIO/VISUAL ALARMS ON 32/33 FLOORS — AS REQUESTED M/R: EDWARD CAMPBELL @ NOTIFY SYSTEM ACK/REGRESS PROPERLY. — (TOTAL 04½)

(A) INACCESSIBLE (B) MISSING (C) DEFECTIVE (D) OTHER

FIRE SERVICE INCORPORATED :27005

Subsidiary of Firecom, Inc.
39-27 Fifty Ninth Street
Woodside, New York 11377
(718) 899-2311

REPORT OF FIELD SERVICE

LOCATIONS | **DEVICES**

FLOOR	AREA/CLASS			CAUSE	XMTR#	S/D	TEST
10	ELECT	A		1	181	BLK	✓
10	COMM	A		1	181	BLK	✓
10	TELEPH	A		1	181	BLK	✓
10	COMM	B		1	181	BLK	✓
10	ELECT	B		1	181	BLK	✓
10	TELEPH	B		1	181	BLK	✓
10	PASS/FREIGHT		(2)	1	009	BLK	✓
10	ELECT	C		1	180	BLK	✓
10	COMM	C		1	180	BLK	✓
10	TELEPH	C		1	180	BLK	✓
10	TELEPH	D		1	180	BLK	✓
10	ELECT	D		1	180	BLK	✓
10	COMM	D		1	180	BLK	✓
10	CORE/MECH		(2)	1	241	HOUSE	✓
10	RETURN D/D		(3)	1	240	HOUSE	✓
9	ELEV. PASS			1	008	BLK	✓
9	COMM	A		1	179	BLK	✓
9	ELECT	A		1	179	BLK	✓
9	TELEPH	A		1	179	BLK	✓
9	ELECT	B		1	179	BLK	✓
9	COMM	B		1	179	BLK	✓
9	TELEPH	B		1	179	BLK	✓
9	FREIGHT ELEV			1	008	BLK	✓
9	ELECT	C		1	178	BLK	✓
9	COMM	C		1	178	BLK	✓
9	TELEPH	C		1	178	BLK	✓
9	ELECT	D		1	178	BLK	✓
9	COMM	D		1	178	BLK	✓
9	TELEPH	D		1	178	BLK	✓
9	RETURN D/D	SOUTH		1	238	HOUSE	✓
9	RETURN D/D	NORTH		1	238	HOUSE	✓
9	RETURN D/D	EAST		1	238	HOUSE	✓
9	CORE/MECH D/D			1	239	HOUSE	✓
9	CORE/MECH D/D			1	239	HOUSE	✓

INVOICE TO:
T.W.T.C.
Silverstein Prop.
N.Y.C.

SERVICEMAN ASSIGNED: J. Torres / E. Rosario	SEE AT JOB SITE: F.S.I
	DATE SCHEDULED: 3-27-01
CONTRACT #: S/C 00 818	TYPE OF SYSTEM: LSN 2000
FEE SERVICE #	P.O #
CALL AUHTORIZED BY	PHONE / EXT

☑ MAINTENANCE ☑ TEST
☐ JOB COMPLETE ☐ JOB INCOMPLETE
☐ SYSTEM ON LINE ☐ SYSTEM OFF LINE

DEPARTED SHOP	TIME IN	TIME OUT	RETURNED SHOP	TOTAL HOURS
AM/PM	800 AM/PM	430 PM	AM/PM	

MATERIAL RECORD

QUANTITY	DESCRIPTION	COST
	PREVENTIVE MAINTENANCE CONTRACT	

CUSTOMER NAME (PRINT): Sean Okeeffe
CUSTOMER SIGNATURE:
SERVICEMAN SIGNATURE: J. Torres / E. Rosario

AUTHORIZATION FOR FIRE ALARM INTERRUPTION
The undersigned has been advised by Fire Service Inc. representatives that it may be necessary to interrupt the fire protection service by disconnecting the system and/or a component in the performance of their assigned work.
The undersigned hereby assumes the responsibility for the notification of the authorities at the time the interruption is initiated and will take all of the precautions deemed necessary during the period of interruption and hold harmless Fire Service Inc. and its employees regarding interruption of the protection service during the service of the equipment.

NAME DATE TIME

SERVICE PERFORMED & REMAINING: S/Contract - Preventive Maintenance Smoke Detectors Unit on Floors 9 & 10 / Areas Used Listing. - System O.K. / Reset properly. - (Points out). -

(A) INACCESSIBLE (B) MISSING (C) DEFECTIVE (D) OTHER

FIRE SERVICE INCORPORATED

27004

Subsidiary of Firecom, Inc.
39-27 Fifty Ninth Street
Woodside, New York 11377
(718) 899-2311

REPORT OF FIELD SERVICE

LOCATIONS		DEVICES				
FLOOR	Area		Cable	Terms	S/D	Test Clean
7TH	Comm A		1	179	BRK	V
	Elect A		1	175	Edwards	V
	Telem A		1	175	BRK	V
	Pass Elev		1	006	BRK	V
	Freight Elev		1	006	BRK	V
	Comm B		1	175	BRK	V
	Elect B		1	175	BRK	V
	Telem B		1	175	BRK	V
	Comm C		1	174	BRK	V
	Elect C		1	174	BRK	V
	Telem C		1	174	BRK	V
	Comm D		1	174	BRK	V
	Elect D		1	174	BRK	V
	Telem D		1	174	BRK	V
	Core Area		1	220	Hochiki	V
	Core Area		1	235	"	V
	Return North	D/D	1	234	"	V
	Return South	N/A	—	—	—	—
6TH	Pass Elev		1	005	BRK	V
	Freight Elev		1	005	BRK	V
	Comm A		1	172	BRK	V
	Elect A		1	172	BRK	V
	Telem A		1	172	BRK	V
	Comm B		1	172	BRK	V
	Elect B		1	172	BRK	V
	Fan Room	Area	1	173	BRK	V
	Fan Room	Area	1	173	BRK	V
	Fan Room	Area	1	173	BRK	V
	Fan Room	D/D	1	231	Hochiki	V
	Fan Room	D/D	1	229	Hochiki	V
	Fan Room	D/D	1	232	Hochiki	V
	Fan Room	D/D	1	233	Hochiki	V

INVOICE TO:
7 W T C
New York, N.Y.

SERVICEMAN ASSIGNED: Frank L. Marcos D.	SEE AT JOB SITE: F.S.D.
CONTRACT #: Sc00818	DATE SCHEDULED: 03-21-01
FEE SERVICE #	TYPE OF SYSTEM: LSH 2000
CALL AUHTORIZED BY	P.O. #
	PHONE / EXT

☒ MAINTENANCE ☒ TEST
☐ JOB COMPLETE ☐ JOB INCOMPLETE
☐ SYSTEM ON LINE ☐ SYSTEM OFF LINE

DEPARTED SHOP	TIME IN	TIME OUT	RETURNED SHOP	TOTAL HOURS
AM PM	8:00 AM PM	4:30 AM PM	AM PM	

MATERIAL RECORD

QUANTITY	DESCRIPTION	COST
	PREVENTIVE MAINTENANCE CONTRACT	

CUSTOMER NAME (PRINT): Sean O'Keeffe.
CUSTOMER SIGNATURE:
SERVICEMAN SIGNATURE: Frank Lewis Marcos Claudio

AUTHORIZATION FOR FIRE ALARM INTERRUPTION
The undersigned has been advised by Fire Service Inc. representative that it may be necessary to interrupt the fire protection service by disconnecting the system and/or a component in the performance of their assigned work.
The undersigned hereby assumes the responsibility for the notification of the authorities at the time the interruption is initiated and will take all of the precautions deemed necessary during the period of interruption and hold harmless Fire Service Inc. and its employees regarding interruption of fire protection service during their service of the equipment.

NAME DATE TIME

SERVICE PERFORMED & REMAINING

Preventive Maintenance
See all Smoke and Heat Detectors located on the 7th & 6th floors performed Satisfactorily.

(A) INACCESSIBLE (B) MISSING (C) DEFECTIVE (D) OTHER

FIRE SERVICE INCORPORATED

Subsidiary of Firecom, Inc.
39-27 Fifty Ninth Street
Woodside, New York 11377
(718) 899-2311

11840

REPORT OF FIELD SERVICE

LOCATIONS			DEVICES				
FLOOR	Areas		Cable	S/D	Zone	Alt Circuit
8	Elev	Mach	1	BRK	007	✓
11	Freight	Elev	1	BRK	007	✓
11	Elect	A	1	BRK	177	✓
11	Comm	A	1	BRK	177	✓
	Teleph	A	1	BRK	177	✓
11	Comm	B	1	BRK	177	✓
11	Elect	B	1	BRK	177	✓
11	Teleph	B	1	BRK	177	✓
11	Comm	C	1	BRK	176	✓
11	Elect	C	1	BRK	176	✓
11	Teleph	C	1	BRK	176	✓
11	Com	D	1	BRK	176	✓
11	Elect	D	1	BRK	176	✓
11	Teleph	D	1	BRK	176	✓
11	Return	D/D North	1	Hochiki	236	✓
11	Return	D/D South	N/A	[redacted]	[redacted]	[redacted]
11	Return	D/D East (File)	1	Hochiki	236	✓
11	Core	M&E D/D	1	Hochiki	237	✓
11	Core	M&E D/D	1	Hochiki	237	✓

Note: Removed & Cap BRK Detector on 2nd Floor Electrical Closet And Replaced with A New One Alpha Setting Report Made By Jay.

INVOICE TO: 7WTC
New York N.Y.

SERVICEMAN ASSIGNED	SEE AT JOB SITE
Frank L. Jay	F.S.D.
	DATE SCHEDULED: 03-20-01
CONTRACT # SC00818	TYPE OF SYSTEM: LSN 2000
FEE SERVICE #	P.O. #
CALL AUTHORIZED BY	PHONE / EXT

☒ MAINTENANCE ☒ TEST
☐ JOB COMPLETE ☐ JOB INCOMPLETE
☐ SYSTEM ON LINE ☐ SYSTEM OFF LINE

DEPARTED SHOP	TIME IN	TIME OUT	RETURNED SHOP	TOTAL HOURS
AM PM	8:00 AM PM	4:30 AM PM	AM PM	

MATERIAL RECORD

QUANTITY	DESCRIPTION	COST
	PREVENTIVE MAINTENANCE CONTRACT	

CUSTOMER NAME (PRINT): Sean O'Keeffe
CUSTOMER SIGNATURE:
SERVICEMAN SIGNATURE: [signature]

AUTHORIZATION FOR FIRE ALARM INTERRUPTION
The undersigned has been advised by Fire Service Inc. representative that it may be necessary to interrupt the fire protection service by disconnecting the system and/or a component in the performance of their assigned work.
The undersigned hereby assumes the responsibility for the notification of the authorities at the time the interruption is initiated and will take all of the precautions deemed necessary during the period of interruption and hold harmless Fire Service Inc. and its employees regarding interruption of fire protection service during their service of the equipment.

NAME DATE TIME

SERVICE PERFORMED & REMAINING: Preventive Maintenance
As per contract cleaned and tested elevator lobby detectors, core detectors and duct smoke detectors on 8th Floor. All devices tested are working properly.
System is operational

(A) INACCESSIBLE (B) MISSING (C) DEFECTIVE (D) OTHER

FIRE SERVICE INCORPORATED

Subsidiary of Firecom, Inc.
39-27 Fifty Ninth Street
Woodside, New York 11377
(718) 899-2311

11839

REPORT OF FIELD SERVICE

LOCATIONS | **DEVICES**

FLOOR	AREA'S			CODE	X/N/D/R	S/D	TEST
11'	COMM	B		1	182		✓
	ELEC	B		1	182		
	TELEPH	B.		1	182		
	FREIGHT	ELEV.		1	010	BAK	✓
	ELEC	A		1	182		
	COMM	A		1	182		
	TELEPH	A		1	182		
	PASS	ELEV.		1	010		
	COMM	C		1	183		
	ELEC	C		1	183		
	TELEPH	C		1	183		
	TELEPH	D		1	183		
	ELEC	D		1	183		
	COMM	D		1	183		
11'	CORE	HER D/D		1	243	HeatKi	✓
	CORE	HER D/D		1	243	HeatKi	✓
	RETURN	D/D	North	1	242	HeatKi	✓
	RETURN	D/D	South	1	242	HeatKi	✓
12'	STORE	PNL	AFC 101	(2) PANELS			
	North Side Unit Repairs. — B COMM.						
	(12VDC BATTERIES Replaced). — Clear.						
1	B Stair	Pull	Station (1-12E) Repairs/Adj.				
	Check O.K. —						

PREVENTIVE MAINTENANCE CONTRACT

INVOICE TO:
D.W.T.C.
Silverstein Prop.
N.Y.C.

SERVICEMAN ASSIGNED: J. Tokes / T. Zinger	SEE AT JOB SITE: F.S.D.
	DATE SCHEDULED: 3-14-01
CONTRACT #: S/C00818	TYPE OF SYSTEM: 8500
FEE SERVICE #	P.O. #
CALL AUHTORIZED BY	PHONE / EXT

☑ MAINTENANCE ☐ TEST
☐ JOB COMPLETE ☐ JOB INCOMPLETE
☐ SYSTEM ON LINE ☐ SYSTEM OFF LINE

DEPARTED SHOP	TIME IN	TIME OUT	RETURNED SHOP	TOTAL HOURS
AM PM	900 AM PM	430 AM PM	AM PM	

MATERIAL RECORD

QUANTITY	DESCRIPTION	COST
1	12VDC BATTERIES	

CUSTOMER NAME (PRINT): Sean O'Keeffe.
CUSTOMER SIGNATURE
SERVICEMAN SIGNATURE

AUTHORIZATION FOR FIRE ALARM INTERRUPTION
The undersigned has been advised by Fire Service Inc representative that it may be necessary to interrupt the fire protection service by disconnecting the system and/or a component in the performance of their assigned work.
The undersigned hereby assumes the responsibility for the notification of the authorities at the time the interruption is initiated and will take all of the precautions deemed necessary during the period of interruption and hold harmless Fire Service Inc and its employees regarding interruption of fire protection service during their service of the equipment.

NAME _____ DATE _____ TIME _____

SERVICE PERFORMED & REMAINING: S/Contract. Drew Maintenance on Smoke Detectors Inside Area Closets on (Listing) on 11' Floor. — Check Repairs on 12' Fl. Store Pnl & (2) Fl Transf/w. — System Back/Restored Back to Operation.

(A) INACCESSIBLE (B) MISSING (C) DEFECTIVE (D) OTHER

FIRE SERVICE INCORPORATED

Subsidiary of Firecom, Inc.
39-27 Fifty Ninth Street
Woodside, New York 11377
(718) 899-2311

11838

REPORT OF FIELD SERVICE

LOCATIONS			DEVICES				
FLOOR	AREA			CODE	XTNDR	S/D	TEST
13	ELEV. PASS			1	0192	BLK	✓
	FREIGHT ELEV			1	0132	BLK	✓
	COMM	A-B	(2)	1	186	BLK	✓
	ELECT	A-B	(2)	1	186	BLK	✓
	TELEPH	A-B	(2)	1	186	BLK	✓
	CORE	MECH D/D		1	247	HOCHIKI	✓
	CORE	MECH D/D		1	247	HOCHIKI	✓
	PLENUM	D/D	NORTH	1	246	HOCHIKI	✓
	PLENUM	RET D/D	SOUTH	1	246	HOCHIKI	✓
	COMM	C-D	(2)	1	187	BLK	✓
	ELECT	C-D	(2)	1	187	BLK	✓
	TELEPH	C-D	(2)	1	187	BLK	✓
12	PASS ELEV.			1	011	BLK	✓
	ELECT	A-B	(2)	1	184	BLK	✓
	TELEPH	A-B	(2)	1	184	BLK	✓
	COMM	A-B	(2)	1	184	BLK	✓
	FREIGHT	ELEV		1	011	BLK	✓
	CORE	MECH D/D		1	245	HOCHIKI	✓
*	CORE	MECH D/D	(LED)	1	245	HOCHIKI	✓
	RETURN	D/D	NORTH	1	244	HOCHIKI	✓
	RETURN	D/D	SOUTH	1	244	HOCHIKI	✓
	COMM	C		1	185	BLK	✓
	ELECT	C		1	185	BLK	✓
	TELEPH	C		1	185	BLK	✓
	TELEPH	D		1	185	BLK	✓
	COMM	D		1	185	BLK	✓
	ELECT	D		1	185	BLK	✓

PREVENTIVE MAINTENANCE CONTRACT

INVOICE TO:
J.W.T. Co.
Silverstein Prop.
N.Y.C.

SERVICEMAN ASSIGNED: J. Tolner / F. Rashid	SEE AT JOB SITE: F.S.I
	DATE SCHEDULED: 3-13-01
CONTRACT #: 51000 818	TYPE OF SYSTEM: 850
FEE SERVICE #	P.O #
CALL AUHTORIZED BY	PHONE / EXT

☒ MAINTENANCE ☒ TEST
☐ JOB COMPLETE ☐ JOB INCOMPLETE
☐ SYSTEM ON LINE ☐ SYSTEM OFF LINE

DEPARTED SHOP	TIME IN	TIME OUT	RETURNED SHOP	TOTAL HOURS
AM PM	800 AM PM	430 AM PM	AM PM	

MATERIAL RECORD

QUANTITY	DESCRIPTION	COST

CUSTOMER NAME (PRINT): Sean O'Keeffe
CUSTOMER SIGNATURE
SERVICEMAN SIGNATURE

AUTHORIZATION FOR FIRE ALARM INTERRUPTION
The undersigned has been advised by Fire Service Inc. representative that it may be necessary to interrupt the fire protection service by disconnecting the system and/or a component in the performance of their assigned work.
The undersigned hereby assumes the responsibility for the notification of the authorities at the time the interruption is initiated and will take all of the precautions deemed necessary during this period of interruption and hold harmless Fire Service Inc. and its employees regarding interruption of fire protection service during their service of the equipment.

NAME _____ DATE _____ TIME _____

SERVICE PERFORMED & REMAINING: Preformed Annual Test of Detection System Pass E/E Listing Back Floors 13th & 12th All Areas. — Sean unable to

*NOTE: Core Mech D/D (L.E.D.) Replaced/Required Unit O.K. 1 Unit.

(A) INACCESSIBLE (B) MISSING (C) DEFECTIVE (D) OTHER

FIRE SERVICE INCORPORATED

Subsidiary of Firecom, Inc.
39-27 Fifty Ninth Street
Woodside, New York 11377
(718) 899-2311

14546

REPORT OF FIELD SERVICE

LOCATIONS			DEVICES				
FLOOR	AREA'S.			CABLE	XMTR #	S/D	TST Clean
15	PASS/FREIGHT	(2)		1	014	BLK	✓
	COMM	B-A	(2)	1	190	BLK	✓
	ELECT	B-A	(2)	1	190	BLK	✓
	TELEPH	B-A	(2)	1	190	BLK	✓
	CORE MECH D/D	Supply		1	251	Hochiki	✓
	CORE MECH D/D	Supply		1	251	Hochiki	✓
	COMM	C		1	191	BLK	✓
	ELECT	C		1	191	BLK	✓
	TELEPH	C		1	191	BLK	✓
	TELEPH	D		1	191	BLK	✓
15	COMM	D		1	191	BLK	✓
	ELECT	D		1	191	BLK	✓
	RETURN	DUCT North		1	230	Hochiki	✓
(A)	"	DUCT South		NO ACCESS	-		-
14	COMM	A-B	(2)	1	189	BLK	✓
	ELECT	A-B	(2)	1	188	BLK	✓
	TELEPH	A-B	(2)	1	188	BLK	✓
	PASS ELEV./FREIGHT		(2)	1	013	BLK	✓
	CORE MECH D/D			1	249	Hochiki	✓
	CORE MECH D/D			1	249	Hochiki	✓
	TELEPH	C		1	189	BLK	✓
	ELECT	C		1	189	BLK	✓
	COMM	C		1	189	BLK	✓
	TELEPH	D		1	189	BLK	✓
	ELECT	D		1	189	BLK	✓
	COMM	D		1	189	BLK	✓
14	RETURN D/D	South		1	248	Hochiki	✓
	" D/D	North		NO ACCESS		As Previous	

PREVENTIVE MAINTENANCE CONTRACT

INVOICE TO:
7 W.T.C.
Silverstein Prop.
N.Y.C.

SERVICEMAN ASSIGNED: J. Tower / F. Rosado	SEE AT JOB SITE: F.S.I.
	DATE SCHEDULED: 3-07-01
CONTRACT #: s/c00 818	TYPE OF SYSTEM: LSN 2000
FEE SERVICE #	P.O. #
CALL AUHTORIZED BY	PHONE / EXT

☑ MAINTENANCE ☐ TEST
☐ JOB COMPLETE ☐ JOB INCOMPLETE
☐ SYSTEM ON LINE ☐ SYSTEM OFF LINE

DEPARTED SHOP	TIME IN	TIME OUT	RETURNED SHOP	TOTAL HOURS
AM PM	800 AM PM	430 AM PM	AM PM	

MATERIAL RECORD

QUANTITY	DESCRIPTION	COST

CUSTOMER NAME (PRINT): J. WEBSTER
CUSTOMER SIGNATURE
SERVICEMAN SIGNATURE

AUTHORIZATION FOR FIRE ALARM INTERRUPTION
The undersigned has been advised by Fire Service Inc. representative that it may be necessary to interrupt the fire protection service by disconnecting the system and/or a component in the performance of their assigned work.
The undersigned hereby assumes the responsibility for the notification of the authorities at the time the interruption is initiated and will take all of the precautions deemed necessary during this period of interruption and hold harmless Fire Service Inc. and its employees regarding interruption of fire protection service during this service of the equipment.

DATE TIME NAME

SERVICE PERFORMED & REMAINING: Service Contract - Preventive Maintenance on Smoke Detectors Both on floors 15 & 14 Floor Areas Made Listed
(A) NOTE: Units on 15" & 14" Return Duct Units not accessable / As previous Listed. - All Units System OK / Reseted. -

(A) INACCESSIBLE (B) MISSING (C) DEFECTIVE (D) OTHER

FIRE SERVICE INCORPORATED

22383

Subsidiary of Firecom, Inc.
39-27 Fifty Ninth Street
Woodside, New York 11377
(718) 899-2311

REPORT OF FIELD SERVICE

LOCATIONS | **DEVICES**

INVOICE TO: J.W.T.C. / N.Y.C.

FLOOR	AREAS			CODE	XTNDE	S/D	TEST
17	PASS	ELEV.		1	016	BRK	✓
	ELECT	A		1	197	BRK	✓
	COMM	A		1	197	BRK	✓
	TELEPH	A		1	197	BRK	✓
	COMM	B		1	197	BRK	✓
	TELEPH	B		1	197	BRK	✓
	ELECT	B		1	197	BRK	✓
	CORE	HER.		1	000	HOOKED	✓
	CORE	HER.		1	000	HOOKED	✓
	FREIGHT	ELEV.		1	016	BRK	✓
	ELECT	C		1	196	BRK	✓
	COMM	C		1	196	BRK	✓
	TELEPH	C		1	196	BRK	✓
	COMM	D		1	196	BRK	✓
	ELECT	D		1	196	BRK	✓
	TELEPH	D		1	196	BRK.	✓
(*)	PLENUM RETURN (NO ACCESS Solid Ceiling) - AS PREVIOUS REPORTED N/A. -						
16	PASS	FREIGHT	(2)	1	015	BLK	✓
	COMM	A-B	(2)	1	193	BLK	✓
	ELECT	A-B	(2)	1	193	BLK	✓
	TELEPH	A-B	(2)	1	193	BLK	✓
	CORE	HER D/D	(1)	1	253	HOOKED	✓
	CORE	HER D/D	(1)	1	253	HOOKED	✓
	COMM	C		1	194	BLK	✓
	ELECT	C		1	194	BLK	✓
	TELEPH	C		1	194	BLK	✓
	TELEPH	D		1	194	BLK	✓
	COMM	D		1	194	BLK	✓
	ELECT	D		1	194	BLK.	✓
	PLENUM RET D/D NORTH.			1	252	HOOKED	✓
(#)	PLENUM RET. D/D SOUTH N/A NO ACCESS Solid Ceiling AS PREVIOUS REPORTED TO BE. -						

SERVICEMAN ASSIGNED: J. TORRES / F. ROSARIO

SEE AT JOB SITE: F.S.I.

DATE SCHEDULED: 3-6-01

CONTRACT #: S/C00818

TYPE OF SYSTEM: 8500

FEE SERVICE #:

P.O. #:

CALL AUHTORIZED BY | PHONE | EXT

☒ MAINTENANCE ☐ TEST

☐ JOB COMPLETE ☐ JOB INCOMPLETE

☐ SYSTEM ON LINE ☐ SYSTEM OFF LINE

DEPARTED SHOP	TIME IN	TIME OUT	RETURNED SHOP	TOTAL HOURS
8 AM/PM	9 AM/PM	4:30 AM/PM	AM/PM	

MATERIAL RECORD

QUANTITY	DESCRIPTION	COST
	PREVENTIVE MAINTENANCE CONTRACT	

CUSTOMER NAME (PRINT): SILVERSTEIN

CUSTOMER SIGNATURE

SERVICEMAN SIGNATURE

AUTHORIZATION FOR FIRE ALARM INTERRUPTION
The undersigned has been advised by Fire Service Inc. representative that it may be necessary to interrupt the fire protection service for disconnecting the system and/or a component in the performance of their assigned work.
The undersigned hereby assumes the responsibility for the notification of the authorities at the time the interruption is initiated and will take all of the precautions deemed necessary during this period of interruption and hold harmless Fire Service Inc. and its employees regarding interruption of the protection service during this service of the equipment.

NAME DATE TIME

SERVICE PERFORMED & REMAINING: TESTING SERVICE AS PUNCH DEFECTIVE Units on Floors 17th & 16th FL. All Areas (Above Listed) - System OK/RESET to Operational. -

* NOTE: 17th FL. RETURN Unit No ACCESS AS previous -

(#) 16th FL NO ACCESS South RETURN UNIT AS previous Reporting. -

(A) INACCESSIBLE (B) MISSING (C) DEFECTIVE (D) OTHER

FIRE SERVICE INCORPORATED

22382

Subsidiary of Firecom, Inc.
39-27 Fifty Ninth Street
Woodside, New York 11377
(718) 899-2311

REPORT OF FIELD SERVICE

LOCATIONS			DEVICES				
FLOOR	AREA	I.S.		TABLE	XTNDR	S/D	TSI Clean
19	ELEV.	Lobby		1	018	BLK.	✓
	ELECT	B		1	201	BLK	✓
	COMM	B		1	201	BLK	✓
	TELEPH	B		1	201	BLK	✓
	COMM	A		1	201	BLK	✓
	ELECT	A		1	201	BLK	✓
	TELEPH	A		1	201	BLK	✓
	FREIGHT	LBBY		1	018	BLK	✓
	COMM	C		1	200	BLK.	✓
	ELECT	C		1	200	BLK	✓
	TELEPH	C		1	200	BLK	✓
	ELECT	D		1	200	BLK	✓
	COMM	D		1	200	BLK	✓
	TELEPH	D		1	200	BLK	✓
19	CORE	HGR.	(2) D/D	1	004	Honeywell	✓
	RETURN	D/D	(2)	1	003	Honeywell	✓
18	ELECT	A		1	199	BLK	✓
	COMM	A		1	199	BLK	✓
	TELEPH	A		1	199	BLK	✓
	PASS ELEV.			1	017	BLK	✓
	ELECT	B		1	199	BLK	✓
	COMM	B		1	199	BLK	✓
	TELEPH	B		1	199	BLK	✓
	FREIGHT	ELEV.		1	017	BLK	✓
	COMM	C		1	198	BLK	✓
	ELECT	C		1	198	BLK	✓
	TELEPH	C		1	198	BLK	✓
	COMM	D		1	198	BLK	✓
	ELECT	D		1	198	BLK	✓
	TELEPH	D		1	198	BLK.	✓
	RETURN	DUCT	NORTH	1	001	Honeywell	✓
18	RETURN	DUCT	SOUTH	1	001	Honeywell	✓
	CORE	HGR	DUCT	1	002	Honeywell	✓
	CORE	HGR	D/D	1	002	Honeywell	✓

INVOICE TO: W.T.C.
SILVERSTEIN PROP.
N.Y.C.

SERVICEMAN ASSIGNED: J. TORRES / F. ROSALLO	SEE AT JOB SITE: F.S.D.
	DATE SCHEDULED: 2-28-01
CONTRACT #: SC00818	TYPE OF SYSTEM: LSN 2000
FEE SERVICE #	P.O #
CALL AUHTORIZED BY	PHONE / EXT
☒ MAINTENANCE	☐ TEST
☐ JOB COMPLETE	☐ JOB INCOMPLETE
☐ SYSTEM ON LINE	☐ SYSTEM OFF LINE

DEPARTED SHOP	TIME IN	TIME OUT	RETURNED SHOP	TOTAL HOURS
AM PM	8:00 AM PM	4:30 AM PM	AM PM	

MATERIAL RECORD

QUANTITY	DESCRIPTION	COST
	PREVENTIVE MAINTENANCE CONTRACT	

CUSTOMER NAME (PRINT): SILVERSTEIN
CUSTOMER SIGNATURE
SERVICEMAN SIGNATURE: J. Torres

AUTHORIZATION FOR FIRE ALARM INTERRUPTION
The undersigned has been advised by Fire Service Inc. representative that it may be necessary to interrupt the fire protection service by disconnecting the system and/or a component in the performance of their assigned work.
The undersigned hereby assumes the responsibility for the notification of the authorities at the time the interruption is initiated and will take all of the precautions deemed necessary during the period of interruption and hold harmless Fire Service Inc. and its employees regarding interruptions of the protection service during this service of the equipment.

NAME DATE TIME

SERVICE PERFORMED & REMAINING: S/ CONTRACT - P/M MAINTENANCE ON SMOKE DETECTORS CLASS E SYSTEM ON FLOORS 19 & 18 FL ON LISTED BASE SYSTEM CKT. / NECESSARY FUNCTIONS OUTPUTS &

(A) INACCESSIBLE (B) MISSING (C) DEFECTIVE (D) OTHER

FIRE SERVICE INCORPORATED

22381

Subsidiary of Firecom, Inc.
39-27 Fifty Ninth Street
Woodside, New York 11377
(718) 899-2311

REPORT OF FIELD SERVICE

LOCATIONS			DEVICES				
FLOOR	AREA'S			CABLE	ZONE	1ST CLEAN	S/D
21	PASS ELEV.			1	020	✓	BLK
	FREIGHT ELEV.			1	020	✓	BLK
	COMM	A		1	207	✓	BLK
	TELEPH	A		1	207	✓	BLK
	ELECT	A		1	209	✓	BLK
	ELECT	B		1	204	✓	BLK
	COMM	B		1	204	✓	BLK
	TELEPH	B		1	204	✓	BLK
	ELECT	C		1	205	✓	BLK
	COMM	C		1	205	✓	BLK
	TELEPH	C		1	205	✓	BLK
	CORE	MER	SUPPLY DUCT	1	008	✓	HOOKI
	CORE	MER	SUPPLY DUCT	1	008	✓	HOOKI
	TELEPH	D		1	206	✓	BLK
	ELECT	D		1	206	✓	BLK
	COMM	D		1	206	✓	BLK.
21	RETURN	DUCT	NORTH	1	007	✓	HOOKI
	RETURN	DUCT	SOUTH	1	007	✓	HOOKI
20th	COMM	A		1	203	✓	BLK
	ELECT	A		1	203	✓	BLK
	TELEPH	A		1	203	✓	BLK
	ELECT	B		1	203	✓	BLK
	COMM	B		1	203	✓	BLK
	TELEPH	B		1	203	✓	BLK
	TELEPH	C		1	202	✓	BLK
	COMM	C		1	202	✓	BLK
	ELECT	C		1	202	✓	BLK.
	PASS	ELEV.		1	019	✓	BLK
	FREIGHT	ELEV.		1	019	✓	BLK
	ELECT	D		1	202	✓	BLK
	COMM	D		1	202	✓	BLK
	TELEPH	D		1	202	✓	BLK
	CORE	MER	DUCT (2)	1	006	✓	HOOKI
	RETURN	DUCT	NORTH	1	005		
20	RETURN	DUCT	SOUTH	1	005	✓	

INVOICE TO:
7 WTC
SILVERSTEIN PROPERTIES
N.Y.C.

SERVICEMAN ASSIGNED: J. TORRES / F. ROSARIO	SEE AT JOB SITE: F.S.I.
	DATE SCHEDULED: 2-27-01
CONTRACT #: SC00 818	TYPE OF SYSTEM: LSN 2000
FEE SERVICE #	P.O. #
CALL AUHTORIZED BY	PHONE / EXT

☒ MAINTENANCE ☐ TEST
☐ JOB COMPLETE ☐ JOB INCOMPLETE
☐ SYSTEM ON LINE ☐ SYSTEM OFF LINE

DEPARTED SHOP	TIME IN	TIME OUT	RETURNED SHOP	TOTAL HOURS
AM PM	800 AM PM	430 AM PM	AM PM	

AUTHORIZATION FOR FIRE ALARM INTERRUPTION
The undersigned has been advised by Fire Service Inc. representatives that it may be necessary to interrupt the fire protection service by disconnecting the system and/or a component in the performance of their assigned work.
The undersigned hereby assumes the responsibility for the notification of the authorities at the time the interruption is initiated and will take all of the precautions deemed necessary during this period of interruption and hold harmless Fire Service Inc. and its employees regarding interruption of the protection service during their service of the equipment.

NAME _____ DATE _____ TIME _____

MATERIAL RECORD

QUANTITY	DESCRIPTION	COST
	PREVENTIVE MAINTENANCE CONTRACT	

CUSTOMER NAME (PRINT): SILVERSTEIN
CUSTOMER SIGNATURE:
SERVICEMAN SIGNATURE:

SERVICE PERFORMED & REMAINING: RETN DUCT N.E. 3 045 ✓ HOOKI

S/ CONTRACT / PREVENTIVE MAINTENANCE ON SMOKE DETECTOR UNITS ON FLOORS 21st / 20th AREAS / CIRCUITS AS LISTED ABOVE - SYSTEM ACC/RESETS FUNCTIONS / PRINT OUT. - O.K.

(A) INACCESSIBLE (B) MISSING (C) DEFECTIVE (D) OTHER

FIRE SERVICE INCORPORATED

22380

Subsidiary of Firecom, Inc.
39-27 Fifty Ninth Street
Woodside, New York 11377
(718) 899-2311

REPORT OF FIELD SERVICE

LOCATIONS | **DEVICES**

FLOOR	ALM'S	HDET		CABLE	XTNDR	TST	S/O
22	ELEV.	S/D.		1	021	✓	~~BRK~~ (DFS)
	ELEC	'C'		1	206	✓	BRK.
	COMM	C		1	206	✓	BRK
	TELEPH	C		1	206	✓	BRK
	TELEPH	'D'		1	206	✓	BRK
	COMM	'D'		1	206	✓	BRK.
	ELEC	'D'		1	206	✓	BLK
22	ELEC	'A'		1	207	✓	BLK
	COMM	'A'		1	207	✓	BLK
	TELEPH	'A'		1	207	✓	BLK
	COMM	'B'		1	207	✓	BLK
	ELEC	'B'		1	207	✓	BLK
	TELEPH	'B'		1	207	✓	BLK
	CORE	HEL DET		1	010	✓	HOOKKI
	CORE	HEL DET		1	010	✓	HOOKKI
	RETURN D/D	SOUTH		1	009	✓	HOOKKI
	RETURN D/D	NORTH		1	009		HOOKKI
22	FREIGHT	ELEV.		1	021	✓	BRK.
11	SPEAKER	PAGE	- (3) Shafts Out / Repaired				
	Circuits	for	Existing Fire -				
	TESTED	Unit/Fiber	O.K. -				

PREVENTIVE MAINTENANCE CONTRACT

INVOICE TO: W.T.C. (SILVERSTEIN) N.Y.C.

Mr. S. Cannizzo

SERVICEMAN ASSIGNED	SEE AT JOB SITE
J. Jones	F.S.D.
F. Rosario	DATE SCHEDULED 2-21-01
CONTRACT # S/C 00818	TYPE OF SYSTEM LSN 2000
FEE SERVICE #	P.O. #
CALL AUHTORIZED BY	PHONE / EXT

☒ MAINTENANCE ☐ TEST

☒ JOB COMPLETE ☐ JOB INCOMPLETE

☐ SYSTEM ON LINE ☐ SYSTEM OFF LINE

DEPARTED SHOP	TIME IN	TIME OUT	RETURNED SHOP	TOTAL HOURS
AM PM	800 AM PM	430 AM PM	AM PM	

MATERIAL RECORD

QUANTITY	DESCRIPTION	COST

CUSTOMER NAME (PRINT) SILVERSTEIN

CUSTOMER SIGNATURE

SERVICEMAN SIGNATURE J. Jones

AUTHORIZATION FOR FIRE ALARM INTERRUPTION
The undersigned has been advised by Fire Service Inc. representative that it may be necessary to interrupt the fire protection service by disconnecting the system and/or a component in the performance of their assigned work.
The undersigned hereby assumes the responsibility for the notifications of the time the interruption is started and will take all of the precautions deemed necessary during the period of interruption and hold Harmless Fire Service Inc. and its employees regarding interruption of the protection service during their service of the equipment.

NAME DATE TIME

SERVICE PERFORMED & REMAINING

5/Control - Repair - On Select Tests. - 22nd Fl.
5/Peripheral Tests & Record Sequence Confirmation Preventive Maintenance
Also Check Repairs on Audio Speaker's Page on 11th (3) Shafts N/S. - 12th.
Wiring Corrected with Test O.K. - (As per Required Report).

(A) INACCESSIBLE (B) MISSING (C) DEFECTIVE (D) OTHER

FIRE SERVICE INCORPORATED

22379

Subsidiary of Firecom, Inc.
39-27 Fifty Ninth Street
Woodside, New York 11377
(718) 899-2311

REPORT OF FIELD SERVICE

W/STA SPEAKERS

LOCATIONS / **DEVICES**

FLOOR			CABLE	XMTR	TST	STR'S	UNITS
6	H.E.R.		1	338	✓	O.K	1
	H.E.R-H.V.		1	338	✓		1
	ENG. RAN IT		1	335	✓		1
	Hallway		1	317	✓		1
5	Hallway/Freight		1	336	✓	OK	1
	Switch Gear H.V.		1	336	✓		1
	H.E.R. NORTH.			337	✓		1
	H.E.R. SOUTH			337	✓		1
	H.E.R N.W.			316	✓		1
4	AREA 'B' EXIT			316	✓	OK.	1
3	RAN T. F.S.D. OFFICE			314	✓	OK.	1
2	H.E.R WEST			534	✓	OK	1
2	TEIF/RAMP RM			334	✓		1
2	'A' EXIT			313	✓		1
1	PUMP RM			341	✓	OK.	1
⊕ 1	ENTRANCE CENTER			N/S - OUT OF SERVICE			1
	GROUND/POWER WIRING TO PANEL REMAIN F.S.D. OFFICE —						

INVOICE TO: J.W.T.C.

N.Y.C.

SERVICEMAN ASSIGNED	SEE AT JOB SITE
J. Torres / F. Rosario	F.S.D.
DATE SCHEDULED	2-20-01
CONTRACT #	TYPE OF SYSTEM
SK00 818	LSN 2000
FEE SERVICE #	P.O. #
CALL AUHTORIZED BY	PHONE / EXT

☒ MAINTENANCE ☐ TEST

☐ JOB COMPLETE ☐ JOB INCOMPLETE

☐ SYSTEM ON LINE ☐ SYSTEM OFF LINE

DEPARTED SHOP	TIME IN	TIME OUT	RETURNED SHOP	TOTAL HOURS
800 AM/PM	900 AM/PM	930 AM/PM	AM/PM	

MATERIAL RECORD

QUANTITY	DESCRIPTION	COST
	PREVENTIVE MAINTENANCE CONTRACT	

CUSTOMER NAME (PRINT) SILVERSTEIN.

CUSTOMER SIGNATURE

SERVICEMAN SIGNATURE

AUTHORIZATION FOR FIRE ALARM INTERRUPTION
The undersigned has been advised by Fire Service Inc. representative that it may be necessary to interrupt the fire protection service by disconnecting the system and/or a component in the performance of their assigned work.
The undersigned hereby assumes the responsibility for the notification of the authorities at the time the interruption is initiated and will take all of the precautions deemed necessary during the period of interruption and hold harmless Fire Service Inc. and its employees regarding interruption of the protection service during their service of the equipment.

NAME DATE TIME

SERVICE PERFORMED & REMAINING

S/ CONTRACT — CHECK / TEST FOR OPERATIONS ON COMMUNICATIONS / MANUAL FIRE SYSTEM ADJ: WARDEN'S PHONES STATIONS & SPEAKER'S PAGE ON ALL FLOORS MADE LISTING FLOOR'S COMPLETE. —

(A) INACCESSIBLE (B) MISSING (C) DEFECTIVE (D) OTHER

FIRE SERVICE INCORPORATED

22378

Subsidiary of Firecom, Inc.
39-27 Fifty Ninth Street
Woodside, New York 11377
(718) 899-2311

REPORT OF FIELD SERVICE

LOCATIONS | **DEVICES**

FLOOR				S/D		Cable
25	Elect	B		BRK		2
	Comm	B		"		"
	Tele	B		"		"
	Pass	Elev		"		"
	Freight	Elev		Edwards		2
	Comm	A		BRK		"
	Elect	A		"		"
	Tele	A		"		"
	Elec	C		"		"
	Comm	C		"		2
	Tele	C		"		"
	Tele	D		"		"
	Elect	D		"		"
	Comm	D		"		"
	Return	D/D	North	Hochiki		"
	Return	D/D	South	Hochiki		2
	Core	MER	D/D	Hochiki		"
	Core	MER	D/D	Hochiki		"
24	Elev	Lobby	Pass	BRK		2
	Elev	Lobby	Freight	BRK		"
	Comm	A		"		"
	Elect	A		"		"
	Tele	A		"		"
	Comm	B		"		"
	Elect	B		"		2
	Tele	B		BRK		"
	Comm	C		"		"
	Elect	C		"		"
	Tele	C		"		"
	Comm	D		"		"
	Elect	D		"		"
	Tele	D		"		"
	Return	D/D	North + South	Hochiki		"
	Core	MER	D/D	North + South	Hochiki	"

INVOICE TO: 7WTC
N.Y., N.Y.

SERVICEMAN ASSIGNED: Frank R / Tom White	SEE AT JOB SITE: F.S.D
	DATE SCHEDULED: 02-14-01
CONTRACT #: S000818	TYPE OF SYSTEM: LSM 2000
FEE SERVICE #	P.O. #
CALL AUHTORIZED BY	PHONE / EXT

☑ MAINTENANCE ☑ TEST
☐ JOB COMPLETE ☐ JOB INCOMPLETE
☐ SYSTEM ON LINE ☐ SYSTEM OFF LINE

DEPARTED SHOP	TIME IN	TIME OUT	RETURNED SHOP	TOTAL HOURS
AM PM	8:00 AM PM	4:30 AM PM	AM PM	

MATERIAL RECORD

QUANTITY	DESCRIPTION	COST
	PREVENTIVE MAINTENANCE CONTRACT	

CUSTOMER NAME (PRINT): Sean O'Keeffe
CUSTOMER SIGNATURE:
SERVICEMAN SIGNATURE: Frank Tom Thomas White

AUTHORIZATION FOR FIRE ALARM INTERRUPTION
The undersigned has been advised by Fire Service Inc. representative that it may be necessary to interrupt the fire protection service by disconnecting the system and/or a component in the performance of their assigned work.
The undersigned hereby assumes the responsibility for the notification of the authorities at the time the interruption is initiated and will take all of the precautions deemed necessary during the period of interruption and hold harmless Fire Service Inc. and its employees regarding interruption of fire protection service during their service of the equipment.

NAME / DATE / TIME

SERVICE PERFORMED & REMAINING

Contract Preventive Maintenance
Tested and Cleaned all Smoke and Heat Detectors
On the 25th and 24th Floors, Found All
Every Unit Working Properly. System Back to Normal Operation.

(A) INACCESSIBLE (B) MISSING (C) DEFECTIVE (D) OTHER

FIRE SERVICE INCORPORATED

27009

Subsidiary of Firecom, Inc.
39-27 Fifty Ninth Street
Woodside, New York 11377
(718) 899-2311

REPORT OF FIELD SERVICE

LOCATIONS	DEVICES		
FLOOR	WARDEN PHONES	SPEAKERS	
25th	✓	✓	
24th	✓	✓	
23rd	✓	✓	
21st	✓	✓	
20th	✓	✓	
19th	✓	✓	
18th	✓	✓	
17th	✓	✓	
16th	✓	✓	
15th	✓	✓	
14th	✓	✓	
13th	✓	✓	
12th	✓	✓	
11th	✓	✓ * HORNS (N-S) BY STAIRS A + B.	
8th	✓	✓	
7th	✓	✓	

INVOICE TO: #7 World Trade Center N.Y.C, N.Y.

SERVICEMAN ASSIGNED (I) Clifton Basden (II) Frank Rosario (III) Tom White	SEE AT JOB SITE F.S.D.
	DATE SCHEDULED 13th FEB, 2001
CONTRACT # SC00818	TYPE OF SYSTEM ESN 2000.
FEE SERVICE # -	PO #
CALL AUHTORIZED BY Shop.	PHONE ✓ EXT
☑ MAINTENANCE	☑ TEST
☐ JOB COMPLETE	☐ JOB INCOMPLETE
☐ SYSTEM ON LINE	☐ SYSTEM OFF LINE

DEPARTED SHOP	TIME IN	TIME OUT	RETURNED SHOP	TOTAL HOURS
11:30 AM PM	12:00 AM PM	4:30 AM PM	AM PM	

MATERIAL RECORD

QUANTITY	DESCRIPTION	COST
	PREVENTIVE MAINTENANCE CONTRACT	

CUSTOMER NAME (PRINT) Sean O'Keeffe

CUSTOMER SIGNATURE

SERVICEMAN SIGNATURE Clifton Basden

AUTHORIZATION FOR FIRE ALARM INTERRUPTION
The undersigned has been advised by Fire Service Inc representative that it may be necessary to interrupt the fire protection service by disconnecting the system and/or a component in the performance of their assigned work.
The undersigned hereby assumes the responsibility for the notification of the authorities at the time the interruption is initiated and will take all of the precautions deemed necessary during the period of interruption and hold harmless Fire Service Inc and its employees regarding interruption of the protection service during their service of the equipment.

NAME DATE TIME

SERVICE PERFORMED & REMAINING Performed service - Contract of Bldg Class-"E" Warden Phones and Floor-Page Speakers from 25th floor down through 7th floor. Found (1) problem — Horns - By Stair 'A' and Stair 'B' are NOT operating. all other devices tested are operating properly. RESTORED system back to normal operation.

(A) INACCESSIBLE (B) MISSING (C) DEFECTIVE (D) OTHER

FIRE SERVICE INCORPORATED

22375

Subsidiary of Firecom, Inc.
39-27 Fifty Ninth Street
Woodside, New York 11377
(718) 899-2311

REPORT OF FIELD SERVICE

EXIT 1 — LOCATIONS | HANDI STATIONS — DEVICES

FLOOR	A	B	C		H/STA		UNITS
48	147	147			✓		2
47	080	081	082		✓		3
47	FITNESS CENTER		084		✓		1
46	079	078			✓		2
45	076	077			✓		2
44	074	075			✓		2
43	072	073			✓		2
42	071	070			✓		2
41	068	069			✓		2
40	067	066			✓		2
39	065	064	193		✓		3
39	AUDITH EXT 194				✓		2
38	062	063	192		✓		3
37	060	061	191		✓		3
36	058	059	197		✓		3
35	056	057	195		✓		3
34	054	055			✓		2
33	051	050			✓		2
31	048	049			✓		2
30	046	047			✓		2
29	044	045			✓		2
28	042	043			✓		2
27	040	041			✓		2
27	040	EAST CORRIDOR			✓		1
26	038	039			✓		2
26	038	EAST CORRIDOR			✓		1
5	N/A				—		
4	033	034			✓		2
4	EASTHAM 202/ESCALATOR				✓		3
3	029	030	S.E 032 · SW031		✓		4
3	N.W. ENTRANCE/BOAT HOUSE/CONF. EAST				✓	201	3

INVOICE TO: 7 W.T.C. (Solomon Smith Barney) N.Y.C.

SERVICEMAN ASSIGNED	SEE AT JOB SITE
J. TOLLER / J. LUSARDO	F-S-7
	DATE SCHEDULED: 2-07-01
CONTRACT #: S/00 818	TYPE OF SYSTEM: LSN 2000
FEE SERVICE #	P.O. #
CALL AUHTORIZED BY	PHONE / EXT

☒ MAINTENANCE ☒ TEST
☐ JOB COMPLETE ☐ JOB INCOMPLETE
☐ SYSTEM ON LINE ☐ SYSTEM OFF LINE

DEPARTED SHOP	TIME IN	TIME OUT	RETURNED SHOP	TOTAL HOURS
AM PM	700 AM PM	430 (NOT) PM	AM PM	

AUTHORIZATION FOR FIRE ALARM INTERRUPTION
The undersigned has been advised by Fire Service Inc. representative that it may be necessary to interrupt the fire protection service by disconnecting the system and/or a component in the performance of their assigned work.
The undersigned hereby assumes the responsibility for the misdirection of the authorities at the time the interruption is restored and will take all of the precautions deemed necessary during this period of interruption and hold harmless Fire Service Inc. and its employees regarding interruption of the protection service during their service of the equipment.

TIME / DATE / NAME

MATERIAL RECORD

QUANTITY	DESCRIPTION	COST
	PREVENTIVE MAINTENANCE CONTRACT	

CUSTOMER NAME (PRINT): Sean O'Keeffe.
CUSTOMER SIGNATURE:
SERVICEMAN SIGNATURE:

SERVICE PERFORMED & REMAINING Floor	A	B	TST	UNITS	
2	027	028	✓	2	TEST ACTIVATION & MANUAL PULL STATIONS
1	S.E. DOOR 024		✓	1	ON FLOORS (LISTED) 48TH FL. -
1	S.W. DR 025		✓	1	ANNUNCIATORS / ALARMS, ACK / RESET / FCS78. -
1	LOADING POST 026		✓	1	(PRINT OUT DEVIT.) -

(A) INACCESSIBLE (B) MISSING (C) DEFECTIVE (D) OTHER

FIRE SERVICE INCORPORATED

22374

Subsidiary of Firecom, Inc.
39-27 Fifty Ninth Street
Woodside, New York 11377
(718) 899-2311

REPORT OF FIELD SERVICE

LOCATIONS			DEVICES			
FLOOR	STAIR	EXIT		CODE	M/STA	TST
25		A		2	036	✓
25		B		2	037	✓
24		A		2	034	✓
24		B		2	035	✓
23		A		2	032	✓
23		B		2	033	✓✓
22		A		2	070	✓
22		B		2	071	✓
21		A		2	068	✓
21		B		2	069	✓
20		A		2	066	✓
20		B		2	067	✓
19		A		2	064	✓
19		B		2	065	✓
18		A		2	062	✓
18		B		2	063	✓
17		A		2	060	✓
17		B		2	061	✓
16		A		2	058	✓
16		B		2	059	✓
15		A		2	056	✓
15		B		2	057	✓
14		A		2	054	✓
14		B		2	055	✓
13		A		2	052	✓
13		B		2	053	✓
12		A		1	050	✓
12		B		1	051	✓
11		A		1	048	✓
11		B		1	049	✓
10		A		1	046	✓
10		B		1	047	✓
9		A		1	044	✓
9		B		1	045	✓
8		A		1	042	✓ ADJ. G-L.
8		B		1	043	✓ PREV. MAINT. & SERVICE (METAL) ✓.
7		A		1	040	✓ FEB / ACTIVATION MANUAL PULL STATIONS
7		B		1	041	✓ ON FLOOR (ABOVE LISTED). — 25/6 FL.
6		A		1	038	✓ by EXIT TO STAIRS A+B. — ANNUNCIATION
6		B		1	039	✓ PANEL / DOOR / KEYS AT E.C. STA. — (PRINT OUT BOOK). —

SERVICE PERFORMED & REMAINING

INVOICE TO:
2 W.T.C
Silverstein Prop. —
N.Y.C.

SERVICEMAN ASSIGNED: J. Torres / A. Ellger	SEE AT JOB SITE: F.S.D.
	DATE SCHEDULED: 2-06-01
CONTRACT #: 3/C00 818	TYPE OF SYSTEM: CSN2002
FEE SERVICE #	P.O #
CALL AUHTORIZED BY	PHONE / EXT

☒ MAINTENANCE ☒ TEST
☐ JOB COMPLETE ☐ JOB INCOMPLETE
☐ SYSTEM ON LINE ☐ SYSTEM OFF LINE

DEPARTED SHOP	TIME IN	TIME OUT	RETURNED SHOP	TOTAL HOURS
AM PM	800 AM PM	430 AM PM	AM PM	

MATERIAL RECORD

QUANTITY	DESCRIPTION	COST
	PREVENTIVE MAINTENANCE CONTRACT	

CUSTOMER NAME (PRINT): Sean O'Keeffe.
CUSTOMER SIGNATURE
SERVICEMAN SIGNATURE

AUTHORIZATION FOR FIRE ALARM INTERRUPTION
The undersigned has been advised by Fire Service Inc. representative that it may be necessary to interrupt the fire protection service by disconnecting the system and/or a component in the performance of their assigned work.
The undersigned hereby assumes the responsibility for the notification of the authorities at the time the interruption is initiated and will take all of the precautions deemed necessary during the period of interruption and hold harmless Fire Service Inc. and its employees regarding interruption of fire protection service during their service of the equipment.

TIME
DATE
NAME

(A) INACCESSIBLE (B) MISSING (C) DEFECTIVE (D) OTHER

FIRE SERVICE INCORPORATED

22373

Subsidiary of Firecom, Inc.
39-27 Fifty Ninth Street
Woodside, New York 11377
(718) 899-2311

REPORT OF FIELD SERVICE

LOCATIONS		DEVICES					
FLOOR				TAMPER		W/FL.	TEST/CLEAN
35	STAIR	'B' RISER		2-132		2-100	✓
34	STAIR	'B' RISER		2-131		2-099	✓
33	STAIR	'B' RISER		2-130		2-098	✓
32	STAIR	'B' RISER		2-129		2-097	✓
31	STAIR	'B' RISER		2-128		2-096	✓
30	STAIR	'B' RISER		2-127		2-095	✓
29	STAIR	'B' RISER		2-126		2-094	✓
28	STAIR	'B' RISER		2-125		2-093	✓
27	STAIR	'B' RISER		2-124		2-092	✓
26	STAIR	'B' RISER		2-123		2-091	✓
G	PUMP RM.			2-113			
G	"	"		2-115			
G	"	"		2-116			
G	"	"		2-118			
G	"	"		2-117			
G	"	"		2-119			
G	"	"		2-120			
G	"	"		2-121			
G	"	"		2-122			
G	"	"		2-124			
G	COMPRESSOR/DRYER			2-157			

INVOICE TO: T.W.T.C.

H-Y-C.

J. CARLIGAN

SERVICEMAN ASSIGNED	SEE AT JOB SITE
J. TORRE	F.S.D.
F. ROSALIA	DATE SCHEDULED: 1-31-01
CONTRACT # S/C 00 818	TYPE OF SYSTEM: LSN 2000
FEE SERVICE #	P.O. #
CALL AUHTORIZED BY	PHONE / EXT

☐ MAINTENANCE ☑ TEST

☐ JOB COMPLETE ☐ JOB INCOMPLETE

☐ SYSTEM ON LINE ☐ SYSTEM OFF LINE

DEPARTED SHOP	TIME IN	TIME OUT	RETURNED SHOP	TOTAL HOURS
8:00 AM/PM	9:00 AM/PM	4:30 AM/PM	AM/PM	

AUTHORIZATION FOR FIRE ALARM INTERRUPTION
The undersigned has been advised by Fire Service Inc. representative that it may be necessary to interrupt the fire protection service by disconnecting the system and/or a component as the performance of their assigned work.
The undersigned hereby assumes the responsibility for the notification of the authorities at the time the interruption is initiated and will take all of the precautions deemed necessary during the period of interruption and hold harmless Fire Service Inc. and its employees regarding interruption of fire protection service during their service of the equipment.

NAME _____ DATE _____ TIME _____

MATERIAL RECORD

QUANTITY	DESCRIPTION	COST
	PREVENTIVE MAINTENANCE CONTRACT	

CUSTOMER NAME (PRINT) Sean O'Keeffe

CUSTOMER SIGNATURE

SERVICEMAN SIGNATURE

SERVICE PERFORMED & REMAINING: SERVICE CONTRACT - PREV. MAINTENANCE CHECK TEST / WATERFLOW S/W & TAMPER'S ON STANDPIPE RISER 'B' STAIRCASE. - ON FLOOR ABOVE LISTED (PAINT NOT AVAILABLE). - SYSTEM FIRE PUMP UNIT ACKNOWLEDGED ALARM SIGNALS / TESTS. - SEE NOTE. - COMPLETE. -

(A) INACCESSIBLE (B) MISSING (C) DEFECTIVE (D) OTHER

FIRE SERVICE INCORPORATED

22372

Subsidiary of Firecom, Inc.
39-27 Fifty Ninth Street
Woodside, New York 11377
(718) 899-2311

REPORT OF FIELD SERVICE

LOCATIONS		DEVICES			
FLOOR		TAMPERS		W/F.	TEST CHECK
47	STAIR 'B' Riser	2-155		2-112	✓
46	WATER TANK Rm	2.148			
	" "	2149			
	" "	2150			
	" "	2.151			
	" "	2-152			
	" "	2.153			
46	STAIR 'B' RISER	2.154		2.111	✓
45	STAIR 'B' RISER	2.147		2.110	✓
44	" "	2 142		2 109	✓
44	" "	2.146			
43	" "	2-140		2.108	✓
42	" "	2.139		2.107	✓
41	STAIR 'B' RISER	2.138		2.106	✓
40	" "	2.137		2105	✓
39	" "	2 136		2-104	✓
38	" "	2.135		2-103	✓
37	" "	2.134		2.102	✓
36	STAIR 'B' RISER	2.133		2.101	✓

PREVENTIVE MAINTENANCE CONTRACT

INVOICE TO: 7 W.T.C
N.Y.C
M. J. CARRIGAN

SERVICEMAN ASSIGNED: J. TORRES / F. ROSARIO	SEE AT JOB SITE: F.S.I.
	DATE SCHEDULED: 1-30-01
CONTRACT #: S/C00 818	TYPE OF SYSTEM: LSH 2000
FEE SERVICE #	P.O. #
CALL AUTHORIZED BY	PHONE / EXT

☒ MAINTENANCE ☒ TEST
☒ JOB COMPLETE ☐ JOB INCOMPLETE
☐ SYSTEM ON LINE ☐ SYSTEM OFF LINE

DEPARTED SHOP	TIME IN	TIME OUT	RETURNED SHOP	TOTAL HOURS
AM PM	8AM PM	4:30 AM PM	AM PM	

MATERIAL RECORD

QUANTITY	DESCRIPTION	COST

CUSTOMER NAME (PRINT): Sean O'Leary
CUSTOMER SIGNATURE
SERVICEMAN SIGNATURE

AUTHORIZATION FOR FIRE ALARM INTERRUPTION
The undersigned has been advised by Fire Service Inc. representative that it may be necessary to interrupt the fire protection service by disconnecting the system and/or a component in the performance of their assigned work.
The undersigned hereby assumes the responsibility for the notification of the authorities at the time the interruption is initiated and will take all of the precautions deemed necessary during the period of interruption and hold harmless Fire Service Inc. and its employees regarding interruption of the protection service during this service of the equipment.

NAME DATE TIME

SERVICE PERFORMED & REMAINING: Service Contract - year 2001 / Windows Tampers / Switches / Check Test Alarms / Reset to Fire Pro Panel Unit - Acknolege - / Reset - (Print out Activity) - - See book U/S Floors 47 to 36th - to SE Continue

(A) INACCESSIBLE (B) MISSING (C) DEFECTIVE (D) OTHER

FIRE SERVICE INCORPORATED

22212

Subsidiary of Firecom, Inc.
39-27 Fifty Ninth Street
Woodside, New York 11377
(718) 899-2311

REPORT OF FIELD SERVICE

LOCATIONS | **DEVICES**

FLOOR	B	RISER	CABLE	TAMPR	CABLE	W/F	
25	B	"	2	122	2	090	
24	B	"	2	121	2	089	
23	B	"	2	120	2	088	
22	B	"	1	150	1	103	
21	B	"	1	149	1	102	
20	B	"	1	143	1	101	
20	B	"	1	144	—	—	
20	B	"	1	145	—	—	
20	B	"	1	146	—	—	
19	B	RISER	1	142	1	100	
18	B	"	1	141	1	099	
17	B	"	1	140	1	098	
16	B	"	1	139	1	097	
15	B	"	1	138	1	096	
14	B	"	1	137	1	095	
13	B	"	1	136	1	094	
12	B	"	1	135	1	093	
11	B	"	1	134	1	092	
10	B	RISER	1	133	1	091	
9	B	*	1	132(C)	1	090	
8	B		1	131	1	089	
7	B		1	130	1	087	

INVOICE TO: 7 W.T.C.
N.Y.C.
Mr. J. Cheerman

SERVICEMAN ASSIGNED: J. Torres / F. Rosario	SEE AT JOB SITE: F.S.I.
CONTRACT #: 3/c 00 818	DATE SCHEDULED: 1-24-01
FEE SERVICE #	TYPE OF SYSTEM: LSN 2000
CALL AUHTORIZED BY	PO #
PHONE	EXT

☒ MAINTENANCE ☒ TEST
☐ JOB COMPLETE ☐ JOB INCOMPLETE
☐ SYSTEM ON LINE ☐ SYSTEM OFF LINE

DEPARTED SHOP	TIME IN	TIME OUT	RETURNED SHOP	TOTAL HOURS
AM PM	800 AM PM	430 AM PM	AM PM	

MATERIAL RECORD

QUANTITY	DESCRIPTION	COST
	PREVENTIVE MAINTENANCE CONTRACT	

CUSTOMER NAME (PRINT): SILVERSTEIN
CUSTOMER SIGNATURE
SERVICEMAN SIGNATURE

AUTHORIZATION FOR FIRE ALARM INTERRUPTION
The undersigned has been advised by Fire Service Inc. representative that it may be necessary to interrupt the fire protection service by disconnecting the system and/or a component in the performance of their assigned work.
The undersigned hereby assumes the responsibility for the notification of the authorities at the time the interruption is initiated and will take all of the precautions deemed necessary during the period of interruption and hold harmless Fire Service Inc. and its employees regarding interruption of fire protection service during their service of the equipment.

NAME DATE TIME

SERVICE PERFORMED & REMAINING: SERVICE CONTRACT - YEAR 2001 TESTED ACTIVATION DEVICES / HEAT'S OR TAMPER'S / WATER FLOWS S/W OR (LISTED ABOVE) ON FLOORS 25 TO 7. NOTE: 9" R TAMPER S/W TO CHECK / ADJUSTMENT MAY NEEDED TO FOLLOW UP - CONTACT TEST. - POINT OUT POSSIBLE.

(A) INACCESSIBLE (B) MISSING (C) DEFECTIVE (D) OTHER

FIRE SERVICE INCORPORATED

22211

Subsidiary of Firecom, Inc.
39-27 Fifty Ninth Street
Woodside, New York 11377
(718) 899-2311

REPORT OF FIELD SERVICE

LOCATIONS			DEVICES				
FLOOR				TTB'I		STRB. PNL.	MAINT
6	B	STAIRWAY		2			✓
	B	COMM.			AFC100	1	✓
5	B	COMM			AFC100	1	OUT Serv.
5	B	STAIR		1			✓
5	W. MEN.	(FAN RM)		2			✓
4	B	COMM			AFC100	1	✓
3	B	STAIR		1			✓
3	B	COMM			AFC100	1	✓
2	FRONT AREA WALK				AFC100	1	✓
1	PUMP RM				AFC100	1	✓
1	PUMP RM			1			✓
48	PLANT MEZ				AFC100	1	✓
47	A STAIR CLOSET				AFC100	1	✓
46	ELEV. S/D by SHUTTLE				ELEVATOR (Johnson Fl.)		
	Replaced / INSTALLED -				OLD UNIT BROKEN		
	BACK IN OPERATION. -						
46	B	COMM			AFC100	1	✓

INVOICE TO: TW. T.C.

N.Y.C.

ATT: J. CALLIGAN

SERVICEMAN ASSIGNED	SEE AT JOB SITE
J. TORRES	F.S.I.
F. ROSARIO	DATE SCHEDULED 1-23-01
CONTRACT # S/C 00818	TYPE OF SYSTEM LSN 2000
FEE SERVICE #	P.O. #
CALL AUHTORIZED BY	PHONE / EXT

☒ MAINTENANCE ☒ TEST

☐ JOB COMPLETE ☐ JOB INCOMPLETE

☐ SYSTEM ON LINE ☐ SYSTEM OFF LINE

DEPARTED SHOP	TIME IN	TIME OUT	RETURNED SHOP	TOTAL HOURS
800 AM/PM	900 AM/PM	430 AM/PM	AM/PM	

MATERIAL RECORD

QUANTITY	DESCRIPTION	COST
	PREVENTIVE MAINTENANCE CONTRACT	

CUSTOMER NAME (PRINT) SILVERSTEIN

CUSTOMER SIGNATURE

SERVICEMAN SIGNATURE

AUTHORIZATION FOR FIRE ALARM INTERRUPTION
The undersigned has been advised by Fire Service Inc. representative that it may be necessary to interrupt the fire protection service by disconnecting the system and/or a component in the performance of their assigned work.
The undersigned hereby assumes the responsibility for the notification of the authorities at the time the interruption is initiated and will take all of the precautions deemed necessary during this period of interruption and hold harmless Fire Service Inc. and its employees regarding interruption of fire protection service during their service of the equipment.

TIME

DATE

NAME

SERVICE PERFORMED & REMAINING Courtesy Rec. 2 Year Trouble on Risers TTB'I Units & Strobes Light Fire Alarms PNL's. - Lobby(s) - Supervision / Door Release Voltages Out Puts. - Effects O.K. -

Also Reports on 46th Fl. (Johnson Floor) Smoke Elev. Shuttle Detector Broken Replaced / Installed New Unit - (Big Problem) - Also Rec 3 -

(A) INACCESSIBLE (B) MISSING (C) DEFECTIVE (D) OTHER

FIRE SERVICE INCORPORATED

22210

Subsidiary of Firecom, Inc.
39-27 Fifty Ninth Street
Woodside, New York 11377
(718) 899-2311

REPORT OF FIELD SERVICE

LOCATIONS | **DEVICES**

FLOOR				TTBJ		PANEL STRGS	MAINT
15	CORE HER			3	AFC 100	1	✓
14	CORE HER				AFC 102	1	✓
13	'B' COMM / 'A' ELECT.				AFC 100	2	✓
12	'B' COMM / CORE HER			3	AFC 101	2	✓
11	'B' COMM				AFC 101 (BATTERY CHK.)	2	✓
10	N/A						
9	N/A.						
8	'B' COMM				AFC 101	1	✓
7	'B' COMM / CORE HER		1		AFC 100	1	✓
L66	(DCM - 40) F.C. STATION # 10			CHECK NETWORK / OPER.		PLUGS ADJ.	

INVOICE TO: T.W.T.C.
N.Y.C.

SERVICEMAN ASSIGNED: J. TORRES / F. ROSARIO	SEE AT JOB SITE
CONTRACT #: S/C 00 818	DATE SCHEDULED: 1-17-01
FEE SERVICE #	TYPE OF SYSTEM: LSN 2000
CALL AUHTORIZED BY	PO # / PHONE / EXT

☒ MAINTENANCE ☒ TEST
☐ JOB COMPLETE ☐ JOB INCOMPLETE
☐ SYSTEM ON LINE ☐ SYSTEM OFF LINE

DEPARTED SHOP	TIME IN	TIME OUT	RETURNED SHOP	TOTAL HOURS
AM / PM	800 AM/PM	430 AM/PM	AM / PM	

MATERIAL RECORD

QUANTITY	DESCRIPTION	COST
	PREVENTIVE MAINTENANCE CONTRACT	

CUSTOMER NAME (PRINT): SILVERSTEIN
CUSTOMER SIGNATURE:
SERVICEMAN SIGNATURE:

AUTHORIZATION FOR FIRE ALARM INTERRUPTION
The undersigned has been advised by Fire Service Inc. representative that it may be necessary to interrupt the fire protection service by disconnecting the system and/or a components in the performance of their assigned work.
The undersigned hereby assumes the responsibility for the notification of the authorities at the time the interruption is initiated and will take all of the precautions deemed necessary during this period of interruption and hold harmless Fire Service Inc and its employees regarding interruption of fire protection service during the service of the equipment.

TIME
DATE
NAME

SERVICE PERFORMED & REMAINING: CONTINUE PREV. MAINTENANCE ON RISER, TTBJ / STRGS PNL / SUBSYSTEM - DOOR RELEASES / POWER VOLTAGES READINGS CHECK O.K.
ALSO REPLACED STROBE PNL ON 16TH. - CKT / DISABLED due to FAULTY. (WAIT AT FIELD — TO BE ACTIV. / TRACED. —

(A) INACCESSIBLE (B) MISSING (C) DEFECTIVE (D) OTHER

FIRE SERVICE INCORPORATED

22208

Subsidiary of Firecom, Inc.
39-27 Fifty Ninth Street
Woodside, New York 11377
(718) 899-2311

REPORT OF FIELD SERVICE

LOCATIONS | **DEVICES**

FLOOR				TTB's	PANEL STRBS		MAINTN
24	CORE	HER		(3)	1	AFC100	✓
23	CORE	HER					
22	B'COMM.				(2)	AFC100	✓
21	CORE	HER		(2)	1	AFC100	✓
20	CORE	HER			1	AFC100	✓
19	CORE	HER			1	AFC100	✓
18	CORE	HER		(2)	2	AFC100	✓
17	CORE	HER			1	AFC100	✓
16	CORE	HER			1	AFC100	✓

(1) CKT DEFEC / UNIT REPAIRED

INVOICE TO: T.W.T.C.
N.Y.C

SERVICEMAN ASSIGNED: J. TORRES / F. ROSARIO	SEE AT JOB SITE: F.S.D.
	DATE SCHEDULED: 1-16-01
CONTRACT #: S/C00 818	TYPE OF SYSTEM: LSN 2000
FEE SERVICE #	P.O #
CALL AUHTORIZED BY	PHONE / EXT

☐ MAINTENANCE ☐ TEST
☐ JOB COMPLETE ☐ JOB INCOMPLETE
☐ SYSTEM ON LINE ☐ SYSTEM OFF LINE

DEPARTED SHOP	TIME IN	TIME OUT	RETURNED SHOP	TOTAL HOURS
800 AM PM	900 AM PM	430 AM PM	AM PM	

MATERIAL RECORD

QUANTITY	DESCRIPTION	COST
	PREVENTIVE MAINTENANCE CONTRACT	

CUSTOMER NAME (PRINT): S. WEINSTEIN
CUSTOMER SIGNATURE:
SERVICEMAN SIGNATURE: J. Torres / F. Rosario

SERVICE PERFORMED & REMAINING: Confirm S/Contract - Perf. Maintenance on TTB's Riser (Floors Above) / Listed Strobes P/U's / Subsystems Dool Before Power Voltages Outputs O.K. - Normal Levels. - System Back to Operation /

AUTHORIZATION FOR FIRE ALARM INTERRUPTION
The undersigned has been advised by Fire Service Inc. representative that it may be necessary to interrupt the fire protection service by disconnecting the system and/or a component in the performance of their assigned work.
The undersigned hereby assumes the responsibility for the misdirection of the audience at the time the interruption is initiated and will take all of the precautions deemed necessary during the period of interruption and hold harmless Fire Service Inc. and its employees regarding interruption of the protection service during their service of the equipment.

NAME DATE TIME

(A) INACCESSIBLE (B) MISSING (C) DEFECTIVE (D) OTHER

FIRE SERVICE INCORPORATED 26939

Subsidiary of Firecom, Inc.
39-27 Fifty Ninth Street
Woodside, New York 11377
(718) 899-2311

PREVENTIVE MAINTENANCE CONTRACT

REPORT OF FIELD SERVICE

LOCATIONS		DEVICES	
FLOOR		TTB'S	STROBE PULL
38	FREIGHT AREA	(1) DLC-3	(1) AFC100
37	FREIGHT AREA.	(1) D3C3	(1) AFC100
36	FREIGHT AREA OPPOSITE ELEVATOR (SOUTH)	(1) DLC1	(1) AFC100
35	FREIGHT AREA.		(1) AFC100
34	FREIGHT AREA CONF. RM EST	(1) D3C4	(2) AFC100 PAD102 (1) PAD102
33	FREIGHT AREA	(1) DLC1 DOOR HOLD.	(1) AFC100
32	FREIGHT AREA	(1) D3C3	(1) AFC100
31	FREIGHT AREA	(1) D3C3	(1) AFC100
30	CORE HOLD	(1) DLC1	(1) FREIGHT AREA. AFC100
29	FREIGHT AREA		(1) AFC100
28	FREIGHT AREA	(1) D3C4	(1) AFC100
27	CORE HOLD.	(1) D3C3	(1) Pyrotronics 3
26	CORE HOLD	—	(1) Pyrotronics 3
25	CORE HOLD	—	(1) AFC100

INVOICE TO: W.T.C.

N.Y.C.

SERVICEMAN ASSIGNED: J. Lopez / F. Rosario	SEE AT JOB SITE: F.S.?
	DATE SCHEDULED: 1-10-01
CONTRACT #: 910918	TYPE OF SYSTEM: ISW 2000
FEE SERVICE #	P.O. #
CALL AUHTORIZED BY	PHONE / EXT
☒ MAINTENANCE	☐ TEST
☐ JOB COMPLETE	☐ JOB INCOMPLETE
☐ SYSTEM ON LINE	☐ SYSTEM OFF LINE

DEPARTED SHOP	TIME IN	TIME OUT	RETURNED SHOP	TOTAL HOURS
AM PM	8 AM PM	4:30 PM	AM PM	

MATERIAL RECORD

QUANTITY	DESCRIPTION	COST

CUSTOMER NAME (PRINT): J. LIEBERMAN

CUSTOMER SIGNATURE

SERVICEMAN SIGNATURE

AUTHORIZATION FOR FIRE ALARM INTERRUPTION
The undersigned has been advised by Fire Service Inc. representative that it may be necessary to interrupt the fire protection service by disconnecting the system and/or a component in the performance of their assigned work.
The undersigned hereby assumes the responsibility for the notification of the authorities at the time the interruption is intended and will take all of the precautions deemed necessary during the period of interruption and hold harmless Fire Service Inc. and its employees regarding interruption of the protection service during the service of the equipment.

NAME DATE TIME

SERVICE PERFORMED & REMAINING: Service Performed Preventive Maintenance on TTB's Risers as Listed on Floor's 38th Freight 25th. — and Strobes Pull's. — Door Releases, Power Risers, Check Wiring o.k. — Also Visually Check Floor Page/Panel 32nd o.k. — (Trouble Page 37th) Clear. (Elect. Found Conduit Cut Away). —

(A) INACCESSIBLE (B) MISSING (C) DEFECTIVE (D) OTHER

FIRE SERVICE INCORPORATED

97640

SUBSIDIARY OF FIRECO, INC.

39-27 FIFTY NINTH STREET
WOODSIDE, NEW YORK 11377
(718) 899-2311

REPORT OF FIELD SERVICE

INVOICE TO

SERVICED
F.W.T.C.
N.Y.C.

CALL AUTHORIZED BY	CONTRACT #	FEE SERVICE #	FJ #	PO #	SEE AT JOB SITE
Shop-	S/C00898				F.S.J.

PHONE	EXT	DATE SCHEDULED	TIME SCHEDULED	SERVICEMAN ASSIGNED
		1-9-01	Any	J. Torres & Rosario

MATERIAL RECORD

QUANTITY ISSUED	QUANTITY B/O	FCI NO	DESCRIPTION	UNIT PRICE	PER	TOTAL AMOUNT
			PREVENTIVE MAINTENANCE CONTRACT			

AUTHORIZATION FOR FIRE ALARM INTERRUPTION

The undersigned has been advised by Fire Service, Inc. representative that it may be necessary to interrupt the fire protection service by disconnecting the system and/or a components in the performance of their assigned work.

The undersigned hereby assumes the responsibility for the notification of the authorities at the time the interruption is initiated and will take all of the precautions deemed necessary during this period of interruption and hold harmless Fire Service Inc. and its employees regarding interruption of the protection service during the service of the equipment.

Date

Name

CHECK APPROPRIATE BOX

- ☐ O.C
- ☐ I & T
- ☐ FEE CALL
- ☐ DELIVERY
- ☐ DEMO
- ☐ EMERGENCY CALL
- ☑ CONTRACT CALL
- ☐ PICK UP
- ☐ DEMO OWNER
- ☐ SURVEY

DEPARTED SHOP	TIME IN	TIME OUT	RETURNED SHOP	TOTAL HOURS	START MILEAGE	END MILEAGE	MISC EXPENSE	CAR FARE
	800	420						
	4 Hr.	PM						

- ☐ MAT RECD ☐ PARTIAL
- ☐ OTHER ☐ LABOR RECD

SERVICE DATE: 1-9-01

WILL RETURN ON:

I & T COMPLETE ☐ CALL COMPLETE ☐

CUSTOMER SIGNATURE

SERVICEMAN SIGNATURE

PROBLEM—AS DESCRIBED: Service Contract / Status Repairs Purge / Pressurization — Floors 25/26/24th Fl. — as per F.S.J. Request — also 23rd Pressurization. —

SERVICE PERFORMED: As per Contract check follow up on Purge / Pressurization Activation Fan's Units Mal functions as: 25 Fl. Purge - Pressurization 26 and 24 Floors. — + Pressurization 25th Fl. Units. - Repairing / Exchanging (1) 792 P.C. Board (output Functions Down Loaded System - Units Back in Operation Check O.K. — 24th Fl TTB Unit - Also check with Electrician Faust / For Fiber Purge 39th Fl + Hose Pull. - Check Defective Circuits / short + Grounds - all Corrected. - CRT's Normal. - Trouble Conditions clear. — Back in Operation. —

WORK REMAINING: Of Service Contract.

FCI 155
REV 6186

FIRE SERVICE INCORPORATED

22207

Subsidiary of Firecom, Inc.
39-27 Fifty Ninth Street
Woodside, New York 11377
(718) 899-2311

REPORT OF FIELD SERVICE

LOCATIONS		DEVICES				
FLOOR					CHK	
47	(1)	TTB	DATA	3/4	✓	
47	(1)	TTB	DATA	1/2	✓	
47	(1)	STROBE	PNL		✓	
46	(1)	STROBE	PNL		✓	
45	(1)	TTB	DATA	3/4	✓	
45	(1)	TTB	DATA	1/2	✓	
45	(3)	STROBES	PNL's		✓	
44	(1)	STROBE	PNL		✓	
43	(1)	STROBE	PNL		✓	
43	(1)	TTB	DATA	3/4	✓	
42	(1)	STROBE	PNL		✓	
42	(1)	TTB	DATA	3/4	✓	
42	(1)	TTB	DATA	1/2	✓	
41	(1)	STROBE	PNL		✓	
40	(1)	STROBE	PNL		✓	
40	(1)	TTB	DATA	3/4	✓	
39	(1)	STROBE	PNL		✓	
39	(1)	TTB	DATA	1/2	✓	

INVOICE TO:
2 W.T.C.
N.Y.C.

SERVICEMAN ASSIGNED	SEE AT JOB SITE
J. Torres / F. Rosario	F.S.D.
DATE SCHEDULED	1-3-01
CONTRACT #	S/C 00 818
TYPE OF SYSTEM	LSN 2000
FEE SERVICE #	
P.O #	
CALL AUHTORIZED BY	PHONE / EXT

☒ MAINTENANCE ☒ TEST
☐ JOB COMPLETE ☐ JOB INCOMPLETE
☐ SYSTEM ON LINE ☐ SYSTEM OFF LINE

DEPARTED SHOP	TIME IN	TIME OUT	RETURNED SHOP	TOTAL HOURS
AM PM	8:00 AM PM	4:30 AM PM	AM PM	

MATERIAL RECORD

QUANTITY	DESCRIPTION	COST
	PREVENTIVE MAINTENANCE CONTRACT	

CUSTOMER NAME (PRINT)
CUSTOMER SIGNATURE
SERVICEMAN SIGNATURE

AUTHORIZATION FOR FIRE ALARM INTERRUPTION
The undersigned has been advised by Fire Service Inc. representative that it may be necessary to interrupt the fire protection service by disconnecting the system and/or a component in the performance of their assigned work.
The undersigned hereby assumes the responsibility for the notification of the authorities at the time the interruption is initiated and will take all of the precautions deemed necessary during this period of interruption and hold harmless Fire Service Inc. and its employees regarding interruption of fire protection service during their service of the equipment.

TIME
DATE
NAME

SERVICE PERFORMED & REMAINING

S/CONTRACT - CHECK / PMAINTENANCE ON TTB'S RISER ON FLOOR'S 47 - 46 - 45 - 44 - 43 - 42 - 41 - 40 - 39 FL. -

ALSO CHECK FOR FLOOR PAGE JACK JACK ON 39 FL. (FOREST ELECTRIC AND UNITS) (1) CKT GROUNDED / SHORTED - ALSO (1) STROBE CKT SHORTED - ELECTRICIAN TO TRACE WIRING - SPKR'S / STROBES ONLY (1) CKT EACH IN OPERATION -

(A) INACCESSIBLE (B) MISSING (C) DEFECTIVE (D) OTHER

FIRE SERVICE INCORPORATED

22206

Subsidiary of Firecom, Inc.
39-27 Fifty Ninth Street
Woodside, New York 11377
(718) 899-2311

REPORT OF FIELD SERVICE

LOCATIONS		DEVICES				
FLOOR		PURGE		PRESS	PRESS	
7		✓		8	—	
8		✓		8	7	
9		✓		10	8	
10		✓		9	11	
11		✓		12	10	
12		✓		13	11	
13		✓		14	12	
14		✓		15	13	
15		✓		14	16	
16		✓		17	15	
17		✓		16	18	
18		✓		17	19	
19		✓		20	18	
20		✓		21	19	
21		✓		22	20	
22		✓		21	23	
23		✓		22	—	
24		✓		23	—	
25		—	N/G	—	—	
26		✓		27	—	
27		✓		28	26	
28		✓		27	29	
29		✓		28	30	
30		✓		29	31	
31		✓		30	32	
32		✓		31	33	
33		✓		32	34	
34		✓		33	35	
35		✓		36	34	
36		✓		37	35	
37		✓		38	36	
38		✓		37	39	
39		✓		38	40	
40		✓		41	39	
41		✓		40	42	
42	SERVICE PERFORMED & REMAINING	✓		43	41	
43		✓		44	42	
44		✓		43	45	
45		✓		44	46	
46		✓		45	—	
47		—		—	—	

INVOICE TO: 7 W.T.C
N-7-C.

SERVICEMAN ASSIGNED: J. Tolley / F. Rosario	SEE AT JOB SITE: F-SD
	DATE SCHEDULED: 1-2-01
CONTRACT #: S/C 00 818	TYPE OF SYSTEM: CSD 2000
FEE SERVICE #	P.O. #
CALL AUHTORIZED BY	PHONE / EXT

☑ MAINTENANCE ☐ TEST
☐ JOB COMPLETE ☑ JOB INCOMPLETE
☐ SYSTEM ON LINE ☐ SYSTEM OFF LINE

DEPARTED SHOP	TIME IN	TIME OUT	RETURNED SHOP	TOTAL HOURS
800 AM/PM	900 AM/PM	430 AM/PM	AM/PM	

MATERIAL RECORD

QUANTITY	DESCRIPTION	COST
	PREVENTIVE MAINTENANCE CONTRACT	

CUSTOMER NAME (PRINT)
CUSTOMER SIGNATURE
SERVICEMAN SIGNATURE

AUTHORIZATION FOR FIRE ALARM INTERRUPTION
The undersigned has been advised by Fire Service Inc. representative that it may be necessary to interrupt the fire protection service by disconnecting the system and/or a component in the performance of their assigned work.
The undersigned hereby assumes the responsibility for the notification of the authorities at the time the interruption is initiated and will take all of the precautions deemed necessary during the period of interruption and hold harmless Fire Service Inc. and its employees regarding interruption of fire protection service during the service of the equipment.

NAME _____ DATE _____ TIME _____

As per Bill Request - Check For Operations as Purge / Press. - Status Indications at Console Found Missing Pressurization on 23-24-25-26 as Listed Above. Also 47/46 as Listed. — Manual Press. on Floors 47/46 - 5-5 Manual Purge on Floors 4-3-2-1 FL. —

(A) INACCESSIBLE (B) MISSING (C) DEFECTIVE (D) OTHER

see Print Out. —

FIRE SERVICE INCORPORATED

93978

SUBSIDIARY OF FIRE-COM INC.
39-27 FIFTY NINTH STREET
WOODSIDE, NEW YORK 11377
(718) 899-2311

REPORT OF FIELD SERVICE

INVOICE TO

SERVICED
7 WORLD TRADE CENTER
NEW YORK. NY

CALL AUTHORIZED BY		CONTRACT #	FEE SERVICE #	FJ #	PO #	SEE AT JOB SITE
R.T		SCH UPS				J F.S.D
PHONE	EXT	DATE SCHEDULED	TIME SCHEDULED			SERVICEMAN ASSIGNED
		1-4-2001	AM			C. FORERO

MATERIAL RECORD

QUANTITY ISSUED	QUANTITY B/O	F C I NO	DESCRIPTION	UNIT PRICE	PER	TOTAL AMOUNT
			PREVENTIVE MAINTENANCE CONTRACT			

CHECK APPROPRIATE BOX

- ☐ Q.C
- ☐ I & T
- ☐ FEE CALL
- ☐ DELIVERY
- ☐ DEMO
- ☐ EMERGENCY CALL
- ☒ CONTRACT CALL
- ☐ PICK UP
- ☐ DEMO OWNER
- ☐ SURVEY

DEPARTED SHOP	TIME IN	TIME OUT	RETURNED SHOP	TOTAL HOURS	START MILEAGE	END MILEAGE	MISC EXPENSE	CAR FARE

☐ MAT RECD ☐ PARTIAL
☐ OTHER ☐ LABOR RECD

SERVICE DATE: 1-4-2001

CUSTOMER SIGNATURE: X

I & T COMPLETE ☐ CALL COMPLETE ☐

WILL RETURN ON

SERVICEMAN SIGNATURE: C. FORERO

AUTHORIZATION FOR FIRE ALARM INTERRUPTION

The undersigned has been advised by Fire Service, Inc. representative that it may be necessary to interrupt the fire protection service by disconnecting the system and/or a component in the performance of their assigned work.
The undersigned hereby assumes the responsibility for the notification of the authorities at the time the interruption is initiated and will take all of the precautions deemed necessary during the period of interruption and hold harmless Fire Service Inc. and its employees regarding interruption of fire protection service during their service of the equipment.

Date

X

Name

PROBLEM—AS DESCRIBED: PREVENTIVE MAINTENANCE / SERVICE CONTRACT (UPS)

SERVICE PERFORMED: Checked U.P.S System Took Readings (OK) Total Battery Voltage 140.5 V-dc, output HI 62.2 L1=12.5 L2=10.9 (OK) Checked and Cleaned Battery Rack #1 & #2 and Main Cabinet, Fillers Mini-Fans (OK) System operational.

WORK REMAINING: OK/Tony 1/4/01

(Battery Rack = 30 pcs)

FCI 155
REV 6186

FIRE SERVICE INCORPORATED

22204

Subsidiary of Firecom, Inc.
39-27 Fifty Ninth Street
Woodside, New York 11377
(718) 899-2311

REPORT OF FIELD SERVICE

LOCATIONS | **DEVICES**

FLOOR	AREAS.		S/D	CHG	XTNL	SENS TEST	CHANGE
45	FREIGHT ELEV		BLK	2	022	3.0	✓
	PASS ELEV		BLK	2	022	3.2	✓
	ELECT	A	BLK	2	217	3.0	✓
	COMM	A	BLK	2	217	3.0	✓
	ELECT	B	BLK	2	217	2.8	✓
	TELE	B	BLK	2	217	3.0	✓
	COMM	B	BLK	2	217	3.0	✓
	G ELECTRIC		PEL3	4	083	2.8	✓
	SECURITY		PEL3T	4	083	2.8	✓
45	SHUTTLE ELEV		PEL3	4	011	3.0	✓
	KITCHN SHUTTLE ELEV		PEL3	4	012	3.0	✓
D	AREA STAIR		PEL3T	4	063	3.0	✓
	SHUTTLE FREIGHT KITCHN		PEL3T	4	019	3.0	✓
	AUDIO/VISUAL		PEL3T	4	091	3.0	✓
	AREA RISER SHAFT			4	089	3.0	✓
	EAST ELECT-F		PEL3T	4	059	3.0	✓
	DUCT DET. KITCHN.		EDW3	4	094	3.2	✓
	D/DET. KITCHN		EDW3	4	123	3.2	✓
	D/D. KITCHN-F45-4		EDW3	4	092	3.2	✓

PREVENTIVE MAINTENANCE CONTRACT

INVOICE TO: 7 W.T.C. N.Y.C. (Solomon Brothers)

SERVICEMAN ASSIGNED	SEE AT JOB SITE
J. JONES F. ROSARIO	F.S.I.
CONTRACT #	**DATE SCHEDULED**
S/C00 818	12/27-00
FEE SERVICE #	**TYPE OF SYSTEM**
	CSN 2000
CALL AUHTORIZED BY	**PO #**
	PHONE / **EXT**

☑ MAINTENANCE ☑ TEST
☐ JOB COMPLETE ☐ JOB INCOMPLETE
☐ SYSTEM ON LINE ☐ SYSTEM OFF LINE

DEPARTED SHOP	TIME IN	TIME OUT	RETURNED SHOP	TOTAL HOURS
AM PM	8:30 AM PM	9:30 AM PM	AM PM	

MATERIAL RECORD

QUANTITY	DESCRIPTION	COST

CUSTOMER NAME (PRINT) SILVERSTEIN
CUSTOMER SIGNATURE
SERVICEMAN SIGNATURE

AUTHORIZATION FOR FIRE ALARM INTERRUPTION
The undersigned has been advised by Fire Service Inc. representative that it may be necessary to interrupt the fire protection service by disconnecting the system and/or a component in the performance of their assigned work.
The undersigned hereby assumes the responsibility for the nonfunction of the audiences at the time the interruption is initiated and will take all of the precautions deemed necessary during the period of interruption and hold harmless Fire Service Inc. and its employees regarding interruption of fire protection service during their service of the equipment.

NAME DATE TIME

SERVICE PERFORMED & REMAINING: Prev. Maintenance & Security Test on Inside Detection System - Check 'E' Fire System. CSN 2000 Panel - On 45th Fl. (Solomon Brothers) - System Acceptance Testing - Back to Normal

(A) INACCESSIBLE (B) MISSING (C) DEFECTIVE (D) OTHER

FIRE SERVICE INCORPORATED

22205

Subsidiary of Firecom, Inc.
39-27 Fifty Ninth Street
Woodside, New York 11377
(718) 899-2311

REPORT OF FIELD SERVICE

LOCATIONS | **DEVICES**

INVOICE TO: T.W.T.C.
N.Y.C.

FLOOR			(Zone)	Cable	XMTR	S/D	SENS TEST
GROUND	CEILING			1	163	BLK	3.0
	"			1	163	BLK	3.2
	"			1	163	BLK	3.2
	"			1	163	BLK	3.0
G	CEILING			1	163	BLK	3.2
	—			—	—		
G	ELEV. MACHINERY			1	000	BLK	3.0
16	STROBE/HL	CHECK/ NORMAL WIRING SYSTEM NORMAL.					—

PREVENTIVE MAINTENANCE CONTRACT

SERVICEMAN ASSIGNED: J. TOMEI / F. ROSALES
SEE AT JOB SITE: F-S-D.
DATE SCHEDULED: 12-26-00
CONTRACT #: S1C00 818
TYPE OF SYSTEM: CSN 2000
FEE SERVICE #: —
PO #:
CALL AUHTORIZED BY | PHONE | EXT

☑ MAINTENANCE ☐ TEST
☐ JOB COMPLETE ☐ JOB INCOMPLETE
☐ SYSTEM ON LINE ☐ SYSTEM OFF LINE

DEPARTED SHOP	TIME IN	TIME OUT	RETURNED SHOP	TOTAL HOURS
12:00 AM/PM	12:45 AM/PM	4:30 AM/PM	AM/PM	

MATERIAL RECORD

QUANTITY	DESCRIPTION	COST

CUSTOMER NAME (PRINT): GOLDSTEIN
CUSTOMER SIGNATURE:
SERVICEMAN SIGNATURE:

AUTHORIZATION FOR FIRE ALARM INTERRUPTION
The undersigned has been advised by Fire Service Inc. representative that it may be necessary to interrupt the fire protection service by disconnecting the system and/or a component in the performance of their assigned work.
The undersigned hereby assumes the responsibility for the notification of the authorities at the time the interruption is initiated and will take all of the precautions deemed necessary during the period of interruption and hold harmless Fire Service Inc. and its employees regarding interruption of fire protection service during their service of the equipment.

DATE X TIME

NAME

SERVICE PERFORMED & REMAINING: PREV. MAINTENANCE / SILVERSIDE AREA — GROUND FLOOR — HIGH CEILING MAIN ENTRANCE (USED GENIE BOOM) SMOKE DETECTORS CLOSE FIRE ALARM SYSTEM. — SYSTEM OK/NORMAL. — — ASSIST BOB ALL SILVERSIDE ENG. REMIN. ALSO CHECKED 39 FL STROBE PNL CKT — FIELD WIRING SHORT / PANEL DISPLAY. — (FLOW UNDER TEST/RESTORATION) ALSO FLOOR PAGE SPK CKT. — TROUBLE STATUS;

(A) INACCESSIBLE (B) MISSING (C) DEFECTIVE (D) OTHER

FIRE SERVICE INCORPORATED

22203

Subsidiary of Firecom, Inc.
39-27 Fifty Ninth Street
Woodside, New York 11377
(718) 899-2311

REPORT OF FIELD SERVICE

LOCATIONS			DEVICES				
FLOOR			CABLE	XMDR	S/D	SENS TEST	CLEANED
3RD	SECURITY		3	048	PEC3	3.0	✓
	D/D AHU 34		3	042	EDWDS	3.2	✓
	KITCHEN SUPPLY						
	W. HER AREA		3	006	PEC3T	3.0	✓
	W. HER AREA		3	006	PEC3T	3.0	✓
2ND	W. HER D/D		3	040	EDWDS	3.2	✓
	W. HER D/D		3	041	EDWDS	3.4	✓
	W HER D/D		3	040	EDWDS	3.2	✓
	W. HER D/D		3	040	EDWDS	3.2	✓
3RD	CONF. AREA		1	077	DI-3	3.0	✓
	RECEPTION AREA		1	077	DI-3	3.0	✓
	ELEV. Lobby		3	029	PEC3	3.0	✓
2ND	ELEV Lobby		3	028	PEC3	3.0	✓
2ND	ELEV RM		3	005	PEC3T	3.2	✓
1ST	PLANT HER D/D		3	039	EDWDS	3.2	✓
	PLANT HER D/D		3	037	EDWDS	3.2	✓
	PLANT AREA		1	012	PEC3T	2.8	✓
30	COMMUNICATIONS B		1	184	RETESTED / CHECK		
	(ALSO S/D) BAK UNIT -				O.K.		

INVOICE TO: W.T.C. (SOHMEN BLDG) H.Y.C.

SERVICEMAN ASSIGNED: J. TORRES / J. ROSARIO	SEE AT JOB SITE: F.S.D
	DATE SCHEDULED: 12-20-00
CONTRACT #: S/C 00 818	TYPE OF SYSTEM: LSN 2000
FEE SERVICE #	P.O. #
CALL AUHTORIZED BY	PHONE / EXT

☑ MAINTENANCE ☑ TEST
☐ JOB COMPLETE ☐ JOB INCOMPLETE
☐ SYSTEM ON LINE ☐ SYSTEM OFF LINE

DEPARTED SHOP	TIME IN	TIME OUT	RETURNED SHOP	TOTAL HOURS
AM PM	8:00 AM PM	4:30 AM PM	AM PM	

MATERIAL RECORD

QUANTITY	DESCRIPTION	COST
	PREVENTIVE MAINTENANCE CONTRACT	

CUSTOMER NAME (PRINT): Sean O'Keeffe
CUSTOMER SIGNATURE:
SERVICEMAN SIGNATURE:

AUTHORIZATION FOR FIRE ALARM INTERRUPTION
The undersigned has been advised by Fire Service Inc. representative that it may be necessary to interrupt the fire protection service by disconnecting the system and/or a component in the performance of their assigned work.
The undersigned hereby assumes the responsibility for the notification of the authorities at the time the interruption is initiated and will take all of the precautions deemed necessary during the period of interruption and hold harmless Fire Service Inc. and its employees regarding resumption of fire protection service during their service of the equipment.

TIME
DATE
NAME

SERVICE PERFORMED & REMAINING: PREVENTIVE MAINTENANCE / SENSITIVITY TEST ON SMOKE UNITS CLASS E SYSTEM - SEMI ANNUAL TEST COMPLETED. - AS PER CONTRACT ON AREAS / FLOORS ABOVE LISTED. -

ALSO VISIT ON 30TH B COMMUNICATIONS ROOM - RETESTED / CHECK FOR NORMAL OPERATION / ALL - O.K. -

(A) INACCESSIBLE (B) MISSING (C) DEFECTIVE (D) OTHER

FIRE SERVICE INCORPORATED

22184

Subsidiary of Firecom, Inc.
39-27 Fifty Ninth Street
Woodside, New York 11377
(718) 899-2311

REPORT OF FIELD SERVICE

LOCATIONS / **DEVICES**

FLOOR			CABLE	XTNDR	S/D	SENS TEST	CHANNEL
5TH	MAIN ELEV.		1	004	BRK	3.0	✓
	FREIGHT ELEV		1	004	BRK	3.2	✓
	ROTO CLONE		3	013	PEC3T	3.0	✓
	ROTO CLONE		3	013	PEC3T	3.0	✓
	ELECT	'A'	1	169	BRK	3.0	✓
	ELECT	'B'	1	169	BRK	3.2	✓
	ELECT	'C'	1	169	BRK	3.0	✓
	ELECT	'F'	1	169	BRK	3.2	✓
	TELEPH	'A'	1	169	BRK	3.0	✓
	COMM	'B'	1	169	BRK	3.0	✓
4TH	MAIN ELEV.		1	003	BLK	3.0	✓
	FREIGHT ELEV		1	003	BLK	3.2	✓
	CHEF'S OFFICE		3	043	EMAIL	3.0	✓
	ELECT	'B'	1	167	BLK	3.0	✓
	TELEPH	'A'	1	167	BLK	3.0	✓
	ELECT	'A'	1	167	BLK	3.0	✓
	ELECT	'G'	3	050	PEC3	2.8	✓
	TELEPH	'B'	1	167	BRK	3.0	✓
	COMM	'B'	1	167	BLK	3.0	✓
37	Floor Page Trouble STATUS — CHECK						
	Due to 'B' Loop Grounded. —						
	(Forest Elect. Notified). —						
	to Locate Unit(s) Grounded. —						

INVOICE TO: 7 PFW.T.C.
N.Y.C.

SERVICEMAN ASSIGNED: J. Torres / F. Rosario
SEE AT JOB SITE: F.S.I
DATE SCHEDULED: 12-19-00
CONTRACT #: SK00818
TYPE OF SYSTEM: LSN2000
FEE SERVICE #:
P.O. #:
CALL AUHTORIZED BY:
PHONE:
EXT:

☑ MAINTENANCE ☑ TEST
☐ JOB COMPLETE ☐ JOB INCOMPLETE
☐ SYSTEM ON LINE ☐ SYSTEM OFF LINE

DEPARTED SHOP	TIME IN	TIME OUT	RETURNED SHOP	TOTAL HOURS
AM PM	800 AM PM	930 AM PM	AM PM	

MATERIAL RECORD

QUANTITY	DESCRIPTION	COST
	PREVENTIVE MAINTENANCE CONTRACT	

CUSTOMER NAME (PRINT): Sean O'Keeffe
CUSTOMER SIGNATURE:
SERVICEMAN SIGNATURE:

AUTHORIZATION FOR FIRE ALARM INTERRUPTION
The undersigned has been advised by Fire Service Inc. representative that it may be necessary to interrupt the fire protection service by disconnecting the system and/or a component in the performance of their assigned work.
The undersigned hereby assumes the responsibility for the notification of the authorities at the time the interruption is initiated and will take all of the precautions deemed necessary during the period of interruption and hold harmless Fire Service Inc. and its employees regarding interruption of the protection service during their service of the equipment.

NAME DATE TIME

SERVICE PERFORMED & REMAINING: Preventive Maintenance / Sedgwick Smoke Detection on Solomon Smith Floors 5th/4th. — Area Activity Alarm — Also 37th SPRET Page Trouble Condition Found 'B' Loop Grounding — Elect. Forest Notified (Unit Was Busy) — To Locate Unit & Correct. —

(A) INACCESSIBLE (B) MISSING (C) DEFECTIVE (D) OTHER

FIRE SERVICE INCORPORATED

22183

Subsidiary of Firecom, Inc.
39-27 Fifty Ninth Street
Woodside, New York 11377
(718) 899-2311

REPORT OF FIELD SERVICE

LOCATIONS | **DEVICES**

FLOOR				XMTR#	SENS TEST	S/D.	CHANGE
27	ELEC	A-B	(2)	2-178	3.0	BLK	✓
	COMM	A-B	(2)	2-178	3.0	BLK	✓
	TELEPH	A-B	(2)	2-178	3.2/3.0	BLK	✓
	COMM	C-D	(2)	2-177	3.0	BLK	✓
	ELECT	C-D	(2)	2-177	3.2/3.0	BLK	✓
	TELEPH	C-D	(2)	2-177	3.0/3.2	BLK	✓
	PASS ELEV.		(1)	2-004	3.0	BLK	✓
	FREIGHT ELEV		(1)	2-004	3.0	BLK	✓
	CORE AREA D/D			2-237	3.4	SIF24	✓
	CORE AREA D/D			2-237	3.2	SIF24	✓
27	LADIES BATH D/D R.			2-236	3.2	SIF24	✓
	RET. D/D N/SOUTH		(2)	2-236	3.2	SIF24	✓
26	ELECT	A-B	(2)	2-176	3.0	BLK	✓
	COMM	A-B	(2)	2-176	3.2	BLK	✓
	TELEPH	A-B	(2)	2-176	3.0	BLK	✓
	COMM.	C-D	(2)	2-175	3.0	BLK	✓
	ELECT	C-D	(2)	2-175	3.0	BLK	✓
	TELEPH	C-D	(2)	2-175	3.2/3.0	BLK	✓
	PASS ELEV.		(1)	2-003	3.0	BLK	✓
	FREIGHT ELEV		(1)	2-003	3.2	BLK	✓
	CORE AREA D/D		(1)	2-235	3.4	SIF24	✓
	CORE AREA D/D		(1)	2-235	3.4	SIF24	✓
	RET. D/D LADIES		(1)	2-234	3.2	SIF24	✓
	NORTH D/D RET		(1)	2-234	3.2	SIF24	✓
	SOUTH D/D RET		(1)	2-234	3.4	SIF24	✓

PREVENTIVE MAINTENANCE CONTRACT

INVOICE TO: 7W.T.C.
N.Y.C.

SERVICEMAN ASSIGNED	SEE AT JOB SITE
J. Tourop / F. Rosario	F.S.D.
DATE SCHEDULED	12-13-00
CONTRACT #	SIC00818
TYPE OF SYSTEM	LSN 2000
FEE SERVICE #	
P.O. #	
CALL AUHTORIZED BY	PHONE / EXT

☒ MAINTENANCE ☒ TEST
☐ JOB COMPLETE ☐ JOB INCOMPLETE
☐ SYSTEM ON LINE ☐ SYSTEM OFF LINE

DEPARTED SHOP	TIME IN	TIME OUT	RETURNED SHOP	TOTAL HOURS
800 AM/PM	900 AM/PM	430 AM/PM	AM/PM	

MATERIAL RECORD

QUANTITY	DESCRIPTION	COST

CUSTOMER NAME (PRINT) SILVERSTEIN
CUSTOMER SIGNATURE
SERVICEMAN SIGNATURE

AUTHORIZATION FOR FIRE ALARM INTERRUPTION
The undersigned has been advised by Fire Service Inc. representatives that it may be necessary to interrupt the fire protection service by disconnecting the system and/or a component in the performance of their assigned work.
The undersigned hereby assumes the responsibility for the notification of the authorities at the time the interruption is initiated and will take all of the precautions deemed necessary during this period of interruption and hold harmless Fire Service Inc. and its employees regarding interruption of the protection service during this service of the equipment.

NAME DATE TIME

SERVICE PERFORMED & REMAINING: Preventive Maintenance of Detector Smoke Devices Units Sensitivity + Maintenance by Areas (Above Listed) on Floors 27/26 Floors System Check/Reset. - Functions Operations Normal. -

(A) INACCESSIBLE (B) MISSING (C) DEFECTIVE (D) OTHER

FIRE SERVICE INCORPORATED

22182

Subsidiary of Firecom, Inc.
39-27 Fifty Ninth Street
Woodside, New York 11377
(718) 899-2311

REPORT OF FIELD SERVICE

LOCATIONS				DEVICES				
FLOOR					STROBE	SENS TEST	CLEANED	S/D
29	ELEC	A-13	(2)		2-182	3.0	✓	BRK
	TELE/H	A-B	(2)		2-182	3.2	✓	BRK
	COMM	A-B	(2)		2-182	3.0	✓	BRK
	ELEC	C			2-181	3.0	✓	BRK
	ELEC	D.W/D	(2)		2-181	3.2/3.0	✓	BRK
	ELEC	G/SEC	(2)		3-007	3.0	✓	PEC 3
	ELEC	F			3-014	3.2	✓	PEC 3
	TELE/H	C-D	(2)		2-181	3.2/3.0	✓	BRK
	COMM	C			2-181	3.0	✓	BRK
	PASS/FREIGHT ELEV		(2)		2-006	3.0	✓	BRK
	SHUTTLE ELEV				3-030	2.8	✓	PEC 3
*	CORE MEN AREA		(3)		2-240	3.0	✓	PEC 3T
*	CORE MEN D/D		(2)		2-241	3.2	✓	SIE 24
29	W. MEN AREA		(2)		3-000	3.0	✓	PEC 3T
	W. MEN DIRT	DET	(1)		3-032	3.2	✓	EDWARDS
28	ELEC	A-B	(2)		2-180	3.0	✓	BRK
	COMM	A-B	(2)		2-180	3.2	✓	BRK
	TELE/H	A-B	(2)		2-180	3.0	✓	BRK
	ELEC	C-D	(2)		2-179	3.0	✓	BRK
	COMM	C-D	(2)		2-179	3.2/3.0	✓	BRK
	TELE/FONT	C	(1)		2-179	3.0	✓	BRK
	ELECT	D.W	(1)		2-179	3.0	✓	PEC 3T
	ELECT	F	(1)		2-179	2.8	✓	PEC 3T
	ELECT	G/SEC	(1)		2-180	3.0	✓	PEC 3
	PASS ELEV		(1)		2-005	2.8	✓	EDWARDS
	FREIGHT ELEV		(1)		2-005	3.0	✓	EDWARDS
	SHUTTLE ELEV		(1)		2-005	3.0	✓	PEC 3
	CORE MEN AREA				2-239	3.2	✓	SIE 24
	CORE MEN DIRT	DET			2-239	3.2	✓	SIE 24
	W. MEN AREA		(3)		3-057	3.0	✓	PEC 3T
28	W. MEN DIRT				3-047	3.2	✓	DT 3

INVOICE TO: TWTC

N.Y.C.

SERVICEMAN ASSIGNED	SEE AT JOB SITE
J. TOLLEY	F.S.I.
F. ROSARIO	DATE SCHEDULED: 12-12-00
CONTRACT # S/C 00818	TYPE OF SYSTEM: CSN 2000
FEE SERVICE #	P.O. #
CALL AUHTORIZED BY	PHONE / EXT

☒ MAINTENANCE ☒ TEST

☐ JOB COMPLETE ☐ JOB INCOMPLETE

☐ SYSTEM ON LINE ☐ SYSTEM OFF LINE

DEPARTED SHOP	TIME IN	TIME OUT	RETURNED SHOP	TOTAL HOURS
AM PM	800 AM PM	430 PM	AM PM	

MATERIAL RECORD

QUANTITY	DESCRIPTION	COST
	PREVENTIVE MAINTENANCE CONTRACT	

CUSTOMER NAME (PRINT): SIGNATURE

CUSTOMER SIGNATURE

SERVICEMAN SIGNATURE

AUTHORIZATION FOR FIRE ALARM INTERRUPTION
The undersigned has been advised by Fire Service Inc. representative that it may be necessary to interrupt the fire protection service by disconnecting the system and/or a component in the performance of their assigned work.
The undersigned hereby assumes the responsibility for the notification of the authorities at the time the interruption is initiated and will take all of the precautions deemed necessary during the period of interruption and hold harmless Fire Service Inc. and its employees regarding interruption of fire protection service during their service of the equipment.

DATE

TIME

NAME

SERVICE PERFORMED & REMAINING: Routine Preventive Maintenance Clean/Test) - Security On Service Visit Floors 29 & 28 (A) Listed above. - System Back In Service

(*) NOTE: 29th FL Core Men D/D (1) Front Unit U/N For Service & Danger High Power Like Caution (1) Rear Unit Ceiling - Bldg to provide Safe Access For Service / Core Men -

(A) INACCESSIBLE (B) MISSING (C) DEFECTIVE (D) OTHER

FIRE SERVICE INCORPORATED

22215

Subsidiary of Firecom, Inc.
39-27 Fifty Ninth Street
Woodside, New York 11377
(718) 899-2311

REPORT OF FIELD SERVICE

LOCATIONS | **DEVICES**

INVOICE TO: 7 W.T.C
N.Y.C.

FLOOR			CABLE	X'NDR	S/D	SENS TEST	CHANGE
31	ELECT	A-B	2	187	BRK	3.0	✓
	TELEPH	A-B	2	187	BRK	3.2/BC	✓
	COMM	A-B	2	187	BLK	3.0	✓
	ELEC	C-D	2	186	BLK	3.2	✓
	ELECT	D.W	2	186	BRK	3.0	✓
	ELECT	F	3	016	PEC 3	3.0	✓
	ELECT	G	3	009	PEC 3	2.8	✓
	SECURITY		3	009	PEC 3	3.0	✓
	COAT/COMM 'B'		2	186	BLK	3.0	✓
	COAT A.W.		2	186	BLK	3.0	✓
	PASS ELEV. MAIN		2	008	BLK	3.0	✓
	FREIGHT ELEV		2	008	BLK	3.0	✓
	SHUTTLE ELEV		3	025	PEC 3	3.0	✓
	CORE HER AREA	(3)	2	244	PEC 3T	3.0	✓
	CORE HER D/D	(2)	2	245	SIF 24	3.2	✓
	W. HER AREA	(2)	3	002	PEC 3T	3.0	✓
	W. HER D/D	(2)	3	034	EDWDS	3.2	✓
	N. SUPPLY CLOSET	(2)	2	186	BLK	3.0	✓
30	ELECT	A-B (2)	2	184	BLK	3.0	✓
*	COMM	A-B (2)	2	184	BLK	3.0	✓
	TELEPH	A-B (2)	2	184	BRK	3.0	✓
	ELECT	C-D (2)	2	183	BRK	3.2	✓
	ELECT	D.W	2	183	BLK	3.0	✓
	ELECT	F	3	015	PEC 3	3.2	✓
	ELECT	6/SEC. (2)	3	008	PEC 3	3.0/3.2	✓
	TELE/COMM	C (2)	2	183	BRK	3.0	✓
	COAT/TELEPH	'D'	2	183	BLK	3.0	✓
	PASS/FREIGHT ELEV	(2)	2	007	BLK/DIB	3.0	✓
	SHUTTLE PASS ELEV.		3	024	PEC 3	2.8	✓
	CORE HER AREA	(3)	2	242	PEC 3T	3.2	✓
	CORE HER D/D	(2)	2	243	SIF 24	3.2	✓
	W. HER D/D	(2)	3	033	EDWDS	3.0	✓
	W. HER D/D		3	033	EDWDS	3.2	✓
	W. HER AREA		3	001	PEC 3T	3.2	✓
	W. HER AREA		3	001	PEC 3T	3.0	✓

SERVICEMAN ASSIGNED: F. DALEY, F. ROSHAID
SEE AT JOB SITE: F. J.
DATE SCHEDULED: 12-6-00
CONTRACT #: S/C 00818
TYPE OF SYSTEM: 8500
FEE SERVICE #:
P.O. #:
CALL AUHTORIZED BY:
PHONE:
EXT:

☒ MAINTENANCE ☒ TEST
☒ JOB COMPLETE ☐ JOB INCOMPLETE
☐ SYSTEM ON LINE ☐ SYSTEM OFF LINE

DEPARTED SHOP	TIME IN	TIME OUT	RETURNED SHOP	TOTAL HOURS
AM PM	800 AM PM	430 AM PM	AM PM	

MATERIAL RECORD

QUANTITY	DESCRIPTION	COST
	PREVENTIVE MAINTENANCE CONTRACT	

CUSTOMER NAME (PRINT):
CUSTOMER SIGNATURE:
SERVICEMAN SIGNATURE:

AUTHORIZATION FOR FIRE ALARM INTERRUPTION
The undersigned has been advised by Fire Service Inc. representative that it may be necessary to interrupt the fire protection service by disconnecting the system and/or a component in the performance of their assigned work.
The undersigned hereby assumes the responsibility for the notification of the authorities at the time the interruption is initiated and will take all of the precautions deemed necessary during the period of interruption and hold harmless Fire Service Inc. and its employees regarding interruption of the protection service during their service of the equipment.

NAME DATE TIME

SERVICE PERFORMED & REMAINING: PREV MAINTENANCE SMOKE DETECTOR UNITS LOCATED ON FLOORS 31 & 30 AS LISTED. — SYSTEM ACK/RESET. — SENSITIVITY TEST CHECK. — AS ABOVE. —
NOTE: 30 FL. COMM 'B' CLOSET — BASE TERMINAL STS DEFECTIVE — TO CHECK REPAIR. — TO CONTINUE —.

(A) INACCESSIBLE (B) MISSING (C) DEFECTIVE (D) OTHER

FIRE SERVICE INCORPORATED

22214

Subsidiary of Firecom, Inc.
39-27 Fifty Ninth Street
Woodside, New York 11377
(718) 899-2311

REPORT OF FIELD SERVICE

LOCATIONS | **DEVICES**

FLOOR	AREA'S		CABL	XTUDR	S/D	SENS TEST	CLEANED
33	ELECT	A-B (2)	2	191	BRK	3.2	✓
	COMM	A-B (2)	2	191	BRK	3.0	✓
	TELEPH	A-B (2)	2	191	BRK	3.2/3.0	✓
	ELECT	COMM C (2)	2	192	BLK	3.0	✓
	ELECT	D.W	2	192	BRK	3.2	✓
	ELECT	F	3	018	PEC 3	2.8	✓
	ELECT	G/SEC. (2)	3	011	PEC 3	3.0	✓
	TEK/SUPPLY	C	2	192	BLK	3.0	✓
	COAT	D/TEK	2	192	BLK	3.2	✓
	FREIGH	PASS (2)	2	010	BLK	3.0	✓
	SHUTTLE	ELEV.	3	027	PEC 3	2.8	✓
	CORE MER	AREA (3)	2	250	PEC 3T	3.0	✓
	CORE MER	D/D (2)	2	249	SIF 24	3.2/3.0	✓
	W. MER	AREA (2)	3	004	PEC 3T	2.8	✓
	W. MER	D/D (2)	3	036	EDWIS	3.2	✓
32	ELECT	A-B (2)	2	190	BRK	3.0	✓
	COMM	A-B (2)	2	190	BRK	3.2/3.0	✓
	TELEPH	A-B (2)	2	190	BLK	3.0	✓
	ELECT	C-D (2)	2	189	BLK	3.0	✓
	ELECT	D.W	2	189	BRK	3.2	✓
	ELECT	F	3	017	PEC 3T	3.0	✓
	ELECT	G/SEC.	3	010	PEC 3T	3.2	✓
	TEK	D/SUPPLY	2	189	BLK	3.0	✓
	COMM	C/SUPPLY	2	189	BRK	3.2	✓
	MAIN	FREIGHT ELEV	2	009	BRK	3.0	✓
	SHUTTLE	ELEV	3	026	PEC 3	3.2	✓
	CORE MER	AREA (3)	2	248	PEC 3T	3.0	✓
	CORE MER	D/D (2)	2	247	SIF 24	3.0	✓
	W. MER	AREA (2)	2	003	PEC 3T	3.2	✓
	W. MER	DIRECT	3	035	EDWIS	3.4	✓
	W. MER	D/D	3	035	EDWIS	3.2	✓
	TELEPH	C/COAT	2	189	BRK	3.0	✓

INVOICE TO: TWTC

N.Y.C.

SERVICEMAN ASSIGNED: L. TORRES / F. ROSARIO

SEE AT JOB SITE: F.S.I.

DATE SCHEDULED: 12-5-00

CONTRACT #: S/C 00 818

TYPE OF SYSTEM: LSN 2000

FEE SERVICE #:

PO #:

CALL AUHTORIZED BY | PHONE | EXT

☒ MAINTENANCE ☒ TEST

☐ JOB COMPLETE ☐ JOB INCOMPLETE

☐ SYSTEM ON LINE ☐ SYSTEM OFF LINE

DEPARTED SHOP	TIME IN	TIME OUT	RETURNED SHOP	TOTAL HOURS
AM PM	8:00 AM PM	4:30 AM PM	AM PM	

MATERIAL RECORD

QUANTITY	DESCRIPTION	COST
	PREVENTIVE MAINTENANCE CONTRACT	

CUSTOMER NAME (PRINT)

CUSTOMER SIGNATURE

SERVICEMAN SIGNATURE

SERVICE PERFORMED & REMAINING: PREV. MAINTENANCE / SENSITIVITY TEST OF SMOKE DETECTORS CLASS E FIRE SYSTEM IN FLOORS 33 & 32ND AREAS ABOVE LISTED SYSTEM CHECKED/RESETED.

AUTHORIZATION FOR FIRE ALARM INTERRUPTION

The undersigned has been advised by Fire Service Inc. representative that it may be necessary to interrupt the fire protection service by disconnecting the system and/or a component in the performance of their assigned work.

The undersigned hereby assumes the responsibility for the notification of the authorities at the time the interruption is initiated and will take all of the precautions deemed necessary during this period of interruption and hold harmless Fire Service Inc. and its employees regarding interruption of the protection service during their service of the equipment.

DATE

TIME

(A) INACCESSIBLE (B) MISSING (C) DEFECTIVE (D) OTHER

FIRE SERVICE INCORPORATED

22371

Subsidiary of Firecom, Inc.
39-27 Fifty Ninth Street
Woodside, New York 11377
(718) 899-2311

REPORT OF FIELD SERVICE

LOCATIONS			DEVICES				
FLOOR	AREAS			CABLE	XTNDR	SENS TEST	CLEANED
35	ELECT	A-B	(2)	2	196	3.0	✓
	COMM	A-B	(2)	2	196	3.2/30	✓
	TELEPH	A-B	(2)	2	196	3.2/30	✓
	ELECT	C		4	049	3.2	✓
	ELECT	D		4	049	3.0	✓
	ELECT	F		4	049	3.2	✓
	ELECT	F1		4	049	3.0	✓
	ELECT	G/SEC.	(2)	4	073	3.0	✓
	FREIGHT ELEV			2	012	3.0	✓
	PASS ELEV MAIN			2	012	3.0	✓
	ELEV	SHUTTLE		4	001	3.0	✓
	W. MEZ	AREA		4	025	3.0	✓
	W. MEZ	D/D		4	097	3.2	✓
34	ELECT	A-B	(2)	2	194	3.0	✓
	COMM	A-B	(2)	2	194	3.0	✓
(A)	TELEPH	(A) B	(2)	2	194	3.0	✓
	ELECT	C-D	(2)	2	193	3.2/30	✓
	ELECT	DW		2	193	3.0	✓
	ELECT	F		4	048	3.2	✓
	ELECT	F1/AV	ROOM	4	048	3.0	✓
	ELECT	G/SEC.	(2)	4	072	3.0	✓
	TELEPH	C-D	(2)	2	193	3.0	✓
	MEDICAL	OFFICE	AREA	2	193	3.0	✓
	PASS ELEV.	MAIN		2	011	3.0	✓
	FREIGHT ELEV.			2	011	3.2	✓
	SHUTTLE ELEV.			4	000	3.0	✓
	CORE MEZ	AREA	(3)	2	252	3.2	✓
	CORE MEZ	DUCT	(2)	2	251	3.2	✓
	W. MEZ	AREA		4	024	3.2	✓
	W. MEZ	D/D		4	096	3.2	✓
*	TELEPH	(A)	34TH.	N/A	BLOCKED ENTRANCE		
+	EXH.	UNIT	KITCHEN	N/A.	PENDING. +		

INVOICE TO:
7 W.T.C.
N.Y.C

SERVICEMAN ASSIGNED	SEE AT JOB SITE
J. TORRES / F. ROSARIO	F.S.I.
	DATE SCHEDULED: 11-29-00
CONTRACT # S/C 00 818	TYPE OF SYSTEM: 8500
FEE SERVICE #	P O #
CALL AUHTORIZED BY	PHONE / EXT

☒ MAINTENANCE ☒ TEST
☐ JOB COMPLETE ☐ JOB INCOMPLETE
☐ SYSTEM ON LINE ☐ SYSTEM OFF LINE

DEPARTED SHOP	TIME IN	TIME OUT	RETURNED SHOP	TOTAL HOURS
AM PM	800 AM PM	430 AM PM	AM PM	

MATERIAL RECORD

QUANTITY	DESCRIPTION	COST
	PREVENTIVE MAINTENANCE CONTRACT	

CUSTOMER NAME (PRINT): SILVERSTEIN
CUSTOMER SIGNATURE:
SERVICEMAN SIGNATURE:

AUTHORIZATION FOR FIRE ALARM INTERRUPTION
The undersigned has been advised by Fire Service Inc. representative that it may be necessary to interrupt the fire protection service by disconnecting the system and/or a component in the performance of their assigned work.
The undersigned hereby assumes the responsibility for the notification of the authorities at the time the interruption is released and will take all of the precautions deemed necessary during the period of interruption and hold harmless Fire Service Inc. and its employees regarding interruption of fire protection service during their service of the equipment.

NAME _____ DATE _____ TIME _____

SERVICE PERFORMED & REMAINING

PREV. MAINTENANCE ON SMOKE DETECTION ON FLOORS 35/34TH AREAS LISTED ABOVE - SENSITIVITY TEST / UNIT ALARMED PROPERLY - SYSTEM BACK TO NORMAL -

NOTE: (1) UNIT D/D EXHAUST TO BE DONE. / 34TH FL. -

(A) INACCESSIBLE (B) MISSING (C) DEFECTIVE (D) OTHER

FIRE SERVICE INCORPORATED

22370

Subsidiary of Firecom, Inc.
39-27 Fifty Ninth Street
Woodside, New York 11377
(718) 899-2311

REPORT OF FIELD SERVICE

LOCATIONS			DEVICES				
FLOOR	AREA'S.			CABLE	XMODE	SMOKE TEST	S/D
37	ELEV	A-B	(2)	2	200	3.0	BLK
	COMM	A-B	(2)	2	200	3.2/3.0	BRK
	TELEPH	A-B	(1)	2	200	3.0/3.2	BLK
	ELEV	C-D	(2)	2	199	3.0	BRK
	ELEV	D W		2	199	3.2	BRK
	ELEV	F		4	051	3.0	PEC3
	ELEV	G/SEC.	(2)	4	075	3.0	PEC3
	TELEPH	C-D	(2)	2	199	3.0	BRK
	COMM	C		2	199	3.2	BLK
	PASS	ELEV.		2	014	3.0	BLK
	FREIGHT	ELEV		2	014	3.2	BLK
	ELEV.	SHUTTLE		4	003	3.0	PEC3
	COKE	MEN AREA	(3)	2	258	3.2	PEC3T
	COKE	MEN D/D	(2)	2	251	3.2	SIF24
	W. MEN	AREA	(2)	4	027	3.0	PEC3T
	W. MEN	D/D	(2)	4	099	3.2	EDWDS
36	ELECT	A-B	(2)	2	198	3.0	BLK
	COMM	A-B	(2)	2	198	3.0	BRK
	TELEPH	A-B	(2)	2	198	3.0	BRK
	ELECT	C-D	(2)	2	197	3.0	BLK
	ELECT	F		4	050	3.0	PEC3
	ELECT	D.W		2	197	3.0	BLK
	ELECT	G/SEC	(2)	4	074	3.0	PEC3
	TELEPH	C-D (CONT)	(2)	2	197	3.2	BLK
	COMM	CONTINUE	@	2	197	3.0	BLK
	PASS	ELEV		2	013	3.0	BLK
	FREIGHT	ELEV.		2	013	3.2	BLK
	SHUTTLE	ELEV.		4	002	3.2	PEC3
	COKE	MEN AREA	(3)	2	256	3.0	PEC3T
	COKE	MEN D/D	(2)	2	255	3.2	SIF24
	W. MEN	AREA	(2)	4	026	3.2	PEC3T
	W. MEN	BASKET	DET	4	098	3.4	EDWDS
	W. MEN	D/DET		4	098	3.2	EDWDS

INVOICE TO: T.W.T.C.
N.Y.C.

SERVICEMAN ASSIGNED: J. TORRES / F. ROSARIO
SEE AT JOB SITE: F.S.I.
DATE SCHEDULED: 11.28.00
CONTRACT #: S/C 00818
TYPE OF SYSTEM: CSN 2000
FEE SERVICE #:
P.O. #:
CALL AUTHORIZED BY:
PHONE:
EXT:

☑ MAINTENANCE ☐ TEST
☐ JOB COMPLETE ☐ JOB INCOMPLETE
☐ SYSTEM ON LINE ☐ SYSTEM OFF LINE

DEPARTED SHOP	TIME IN	TIME OUT	RETURNED SHOP	TOTAL HOURS
AM PM	800 AM PM	430 AM PM	AM PM	

MATERIAL RECORD

QUANTITY	DESCRIPTION	COST
	PREVENTIVE MAINTENANCE CONTRACT	

CUSTOMER NAME (PRINT): SILVERSTEIN
CUSTOMER SIGNATURE:
SERVICEMAN SIGNATURE:

AUTHORIZATION FOR FIRE ALARM INTERRUPTION
The undersigned has been advised by Fire Service Inc representatives that it may be necessary to interrupt the fire protection service by disconnecting the system and/or a component in the performance of their assigned work.
The undersigned hereby assumes the responsibility for the notification of the authorities at the time the interruption is initiated and will take all of the precautions deemed necessary during this period of interruption and hold harmless Fire Service Inc. and its employees regarding interruption of fire protection service during their service of the equipment.

NAME DATE TIME

SERVICE PERFORMED & REMAINING: S/CONTRACT - PREV. MAINTENANCE SMOKE DETECTORS ON FLOORS 37/36 AS LISTED ABOVE AS PER SCHEDULE SOLOMON BROTHERS FLOOR - SENSITIVITY TEST - SYSTEM CK HEREBY PROPERLY

(A) INACCESSIBLE (B) MISSING (C) DEFECTIVE (D) C

FIRE SERVICE INCORPORATED

22369

Subsidiary of Firecom, Inc.
39-27 Fifty Ninth Street
Woodside, New York 11377
(718) 899-2311

REPORT OF FIELD SERVICE

LOCATIONS | **DEVICES**

FLOOR	AREA'S			CABK	XTNDR	S/D	SENS TST
39	ELECT	A-B	(2)	242	205	BLK	3.0
	COMM	A-B	(2)	242	205	BRK	3.0
	TELEPH	A-B	(2)	242	205	BRK	3.2/3.0
	ELECT	C		242	204	BLK.	
	ELECT	D.W.		242	204	BLK	
	ELECT	D1		242	204	BRK	
	ELECT	F		246	053	PEC3	
	ELECT	6/SEC	(2)	246	077	PEC3	
	FREIGHT	ELEV		242	016	BRK	
	PASS	ELEV. MAIN		242	016	BLK	
	ELEV.	SHUTTLE		246	005	PEC3	
	RECPTN	CEILING	DUCT	242	254	Apllo	
	RECPTN	CEILING	DUCT	242	254	Apllo	
	RECEPTN	"	DUCT	242	254	Apllo	
	RECEPTN	"	DUCT	242	254	Apllo	
	RECEPTN	"	DUCT	242	254	Apllo	
	CORE	HER AREA		243	~~006~~	~~Apllo~~ PEC3	
	CORE	HER AREA		243	006	~~Apllo~~ PEC3	
	CORE	HER AREA		243	006	PEC3	
	CORE	DUCT DET.		243	007	Hochki	
	CORE	DUCT DET		243	007	Hochki	
	WEST	HER AREA		246	029	PEC3T	
	W. HER.	DUCTDET.		246	101	EDW35	
38	W HER	CEILING	AREA	246	~~046~~ 016	PEC3T	
38	W. HER	DUCT	DET.	246	127	EDW35	

ADDITIONAL (39)

PREVENTIVE MAINTENANCE CONTRACT

INVOICE TO: T.W.T.C. N.Y.C. (Solomon) Smith Barney

SERVICEMAN ASSIGNED	SEE AT JOB SITE
J. TORRES / F. ROSARIO	F.S.I.
CONTRACT #	DATE SCHEDULED: 11-21-00
FEE SERVICE #	TYPE OF SYSTEM: LSN 50
CALL AUHTORIZED BY	PHONE / EXT

☒ MAINTENANCE ☐ TEST

☒ JOB COMPLETE ☐ JOB INCOMPLETE

☐ SYSTEM ON LINE ☐ SYSTEM OFF LINE

DEPARTED SHOP	TIME IN	TIME OUT	RETURNED SHOP	TOTAL HOURS
AM PM	900 AM PM	430 AM PM	AM PM	

MATERIAL RECORD

QUANTITY	DESCRIPTION	COST
	PREVENTIVE MAINTENANCE CONTRACT	

CUSTOMER NAME (PRINT): Sean O'Keefe

CUSTOMER SIGNATURE

SERVICEMAN SIGNATURE

AUTHORIZATION FOR FIRE ALARM INTERRUPTION
The undersigned has been advised by Fire Service Inc. representative that it may be necessary to interrupt the fire protection service by disconnecting the system and/or a component in the performance of duty assigned work.
The undersigned hereby assumes the responsibility for the notification of the authorities at the time the interruption is initiated and will take all of the precautions deemed necessary during the period of interruption, and hold harmless Fire Service Inc. and its employees regarding interruption of fire protection service during their service of the equipment.

TIME / DATE / NAME

SERVICE PERFORMED & REMAINING

Prev. Maintenance Smoke detectors on 39th flr. as listed above and 38 floor proximity side W. HER Family. - Security Tested System Restored Back to operating

(A) INACCESSIBLE (B) MISSING (C) DEFECTIVE (D) OTHER

FIRE SERVICE INCORPORATED

22368

Subsidiary of Firecom, Inc.
39-27 Fifty Ninth Street
Woodside, New York 11377
(718) 899-2311

REPORT OF FIELD SERVICE

LOCATIONS			DEVICES				
FLOOR	AREA'S		CABLE	XTNDR	S/D	SENS REC	
39/38	W. HER AREA. AUDITY		246	046	PEC3T	3.0	
39 38	W. HER DID AUDITY		246	127	EDWDS	3.2	
	ELECT A-B (2)		242	202	BRK	3.0	
	TELEPH A-B (2)		242	202	BRK	3.0	
	COMM A-B (2)		242	202	BRK	3.0	
	ELECT C-D (1)		242	203	BRK	3.0	
	ELECT D. (1)		242	203	BRK	3.2	
	ELECT D.W.		242	203	EDWDS	2.8	
	ELECT F		246	052	PEC3	2.9	
	ELECT G		246	076	PEC3	2.8	
	SECURITY CLOSET		246	076	PEC3	2.8	
	PASS ELEV. MAIN		242	015	BLK	3.0	
	FREIGHT ELEV.		242	015	BLK	3.2	
	ELEV. PASS SHAFT		246	004	PEC3	3.0	
	CORE HER AREA		243	004	PEC3T	3.0	
	" "	"	243	004	PEC3T	3.0	
	" "	"	243	004	PEC3T	3.0	
	CORE HER DUCT		243	005	HOOKUP	3.2	
	CORE HER DUCT		243	005	HOOK	3.2	
	W. HER AREA		246	028	PEC3T	3.0	
38	W. HER DUCT		246	0100	HOOK	3.2	
				—	EDWDS	—	

PREVENTIVE MAINTENANCE CONTRACT

INVOICE TO:
J.W.T.C.
N.Y.C.

SERVICEMAN ASSIGNED: J. TORRES / F. ROSARIO	SEE AT JOB SITE: F.S.I.
CONTRACT #	DATE SCHEDULED: 11-22-00
FEE SERVICE #	TYPE OF SYSTEM: LSN 2000
CALL AUHTORIZED BY	P.O. #
	PHONE / EXT

☑ MAINTENANCE ☐ TEST
☐ JOB COMPLETE ☐ JOB INCOMPLETE
☐ SYSTEM ON LINE ☐ SYSTEM OFF LINE

DEPARTED SHOP	TIME IN	TIME OUT	RETURNED SHOP	TOTAL HOURS
800 AM PM	900 AM PM	430 AM PM	AM PM	

MATERIAL RECORD

QUANTITY	DESCRIPTION	COST

CUSTOMER NAME (PRINT): Sean O'Keefe.
CUSTOMER SIGNATURE:
SERVICEMAN SIGNATURE: J. Torres / F. Rosario

AUTHORIZATION FOR FIRE ALARM INTERRUPTION
The undersigned has been advised by Fire Service Inc. representatives that it may be necessary to interrupt the fire protection service by disconnecting the system and/or a component in the performance of their assigned work.
The undersigned hereby assumes the responsibility for the notification of the authorities at the time the interruption is initiated and will take all of the precautions deemed necessary during the period of interruption and hold harmless Fire Service Inc. and its employees regarding interruption of the protection service during their service of the equipment.

NAME / DATE / TIME

SERVICE PERFORMED & REMAINING: Preventive Service Contract

Prev. Maintenance on Smoke Detection Units on 38th Floor A System Test / Reset - Back to operation

(A) INACCESSIBLE (B) MISSING (C) DEFECTIVE (D) OTHE

FIRE SERVICE INCORPORATED

22366

Subsidiary of Firecom, Inc.
39-27 Fifty Ninth Street
Woodside, New York 11377
(718) 899-2311

REPORT OF FIELD SERVICE

LOCATIONS			DEVICES			
FLOOR	AREA'S		PAGE	MFNDR	S/D	SENS
41	PASS ELEV		2	018	BRK	3.2
	FREIGHT ELEV		2	018	BRK	3.0
	PASS SHUTTLE		4	007	PEC3	3.0
	ELECT	A-B	(2)	2	209	BRK	3.0/3.0
	COMM	A-B	(2)	2	209	BRK	3.0/3.0
	TELEPH	A-B	(2)	2	209	BRK	3.0/3.0
	TELEPH	C-D	(2)	2	195	Apllo	2.8
	COMM	C-D	(2)	2	195	Apllo	2.8
	ELECT	C-D	(2)	2	195	Apllo	2.8
	'G' / SECURITY		(2)	4	079	PEC3	3.0/3.0
	H.E.R.	AREA	(2)	2	019	Apllo	2.8
	H.E.R.	D/DET.	(2)	2	016	Apllo	3.0
40	PASS ~~FREIGHT~~			2	017	BRK	3.0
*	FREIGHT - (BURIED)			2	017	BRK	3.0
	SHUTTLE ELEV.			4	006	PEC3	2.8
	AREA ELECT	A-B	(2)	2	207	BRK	3.0
	COMM	A-B	(2)	2	207	BRK	3.0
	TELEPH	A-B	(2)	2	207	BRK	3.0
	TELEPH	C-D	(2)	2	206	Apllo	2.6
	COMM	C-D	(2)	2	206	Apllo	2.8
	ELECT	C-D	(2)	2	206	Apllo	2.6
	H.E.R.	AREA	(2)	2	208	Apllo	2.8
	H.E.R.	D/D	(2)	2	015	Apllo	2.8
	FILE RM	AREA	Solomon	4	258	Apllo	2.8
	FILE RM	AREA	Solomon	4	251	Apllo	2.8
	'G' ELECT.			4	078	PEC3	2.8
	SECURITY			4	078	PEC3	2.8

PREVENTIVE MAINTENANCE CONTRACT

INVOICE TO: J.W.T.C. N.Y.C. (Solomon)

SERVICEMAN ASSIGNED: J. TORRES / F. ROSARIO

SEE AT JOB SITE: F.S.I.

DATE SCHEDULED: 11-15-00

CONTRACT #: S/C 00818

TYPE OF SYSTEM: LSN 2000

FEE SERVICE #:

PO #:

CALL AUHTORIZED BY | PHONE | EXT

☑ MAINTENANCE ☑ TEST

☐ JOB COMPLETE ☐ JOB INCOMPLETE

☐ SYSTEM ON LINE ☐ SYSTEM OFF LINE

DEPARTED SHOP	TIME IN	TIME OUT	RETURNED SHOP	TOTAL HOURS
AM PM	800 AM PM	430 AM PM	AM PM	

MATERIAL RECORD

QUANTITY	DESCRIPTION	COST

CUSTOMER NAME (PRINT)

CUSTOMER SIGNATURE

SERVICEMAN SIGNATURE

AUTHORIZATION FOR FIRE ALARM INTERRUPTION
The undersigned has been advised by Fire Service Inc. representative that it may be necessary to interrupt the fire protection service by disconnecting the system and/or a component in the performance of the assigned work.
The undersigned hereby assumes the responsibility for the notification of the authorities at the time the interruption is started and will take all of the precautions deemed necessary during the period of interruption and hold harmless Fire Service Inc. and its employees regarding interruption of the protection service during this service of the equipment.

NAME DATE TIME

SERVICE PERFORMED & REMAINING: Prev. Maintenance. Service Contract - On Smoke Detection Class E System on Floor's 41 + 40 (Solomon Smith Barney) on Area (Book Listed). -

(*) Smoke Detector 40th Fl Freight Area Buried top Ceiling above Tiles

(A) INACCESSIBLE - Must be Exposed. - (B) MISSING (C) DEFECTIVE (Finest Elect/Solomon) - (D) OTHER

FIRE SERVICE INCORPORATED

22367

Subsidiary of Firecom, Inc.
39-27 Fifty Ninth Street
Woodside, New York 11377
(718) 899-2311

REPORT OF FIELD SERVICE

LOCATIONS			DEVICES				
FLOOR				Cable	XTNDR	S/D	Seals
42	Pass Elev.			2	019	BLK	3.0
*	FREIGHT ELEV (BURIED)			2	019	BLK.	3.2
	SHUTTLE Pass.			4	008	PEC3	3.0
	TELEPH	A		2	211	BLK	3.0
	ELECT	A		2	211	BLK	3.0
	COMM	A		2	211	BLK	3.2
	COMM	B		2	211	BLK	3.0
	ELECT	B		2	211	BLK	3.0
	TELEPH	B		2	211	BLK	3.2
	TELEPH	C		2	210	Apllo	3.0
	ELECT	C		2	210	Apllo	3.0
	COMM	C		2	210	Apllo	2.8
	COMM	D		2	210	Apllo	2.8
	ELECT	D		2	210	Apllo	3.0
	TELEPH	D		2	210	Apllo	2.8
	MER	AREA		2	212	Apllo	2.8
	MER	AREA		2	212	Apllo	2.8
	MER	D/D		2	017	Apllo	2.8
	MER	D/D		2	017	Apllo	2.8
	6 ELEV.			4	080	PEC3	2.8
	SECURITY DOOR			4	080	PEC3	3.0
	'F' ELEV. — MISSING S/D / NO WIRING						
(*)	ASISTED FIRECOM KEYWALL / BRICK FINDING						
	ON CHECK'S for FAN'S SHUTDOWN /						
	ACTIVATIONS on 18 FF Chart / ALL ALL SYSTEM						

PREVENTIVE MAINTENANCE CONTRACT

INVOICE TO: 2 W.T.C
N.Y.C

SERVICEMAN ASSIGNED: G. TORRES / F. ROSARIO	SEE AT JOB SITE: F.S.I
	DATE SCHEDULED: 11-14-00
CONTRACT #: S/C 00 818	TYPE OF SYSTEM: 850 V LSN 2000
FEE SERVICE #	P.O. #
CALL AUHTORIZED BY	PHONE / EXT

☑ MAINTENANCE ☑ TEST
☐ JOB COMPLETE ☐ JOB INCOMPLETE
☐ SYSTEM ON LINE ☐ SYSTEM OFF LINE

DEPARTED SHOP	TIME IN	TIME OUT	RETURNED SHOP	TOTAL HOURS
AM PM	8:00 AM PM	5:00 AM PM	AM PM	

AUTHORIZATION FOR FIRE ALARM INTERRUPTION
The undersigned has been advised by Fire Service Inc. representative that it may be necessary to interrupt the fire protection service by disconnecting the systems and/or a component in the performance of their assigned work.
The undersigned hereby assumes the responsibility for the notification of the authorities at the time the interruption is initiated and will take all of the precautions deemed necessary during the period of interruption and hold harmless Fire Service Inc. and its employees regarding interruption of the protective service during their service of the equipment.

NAME DATE TIME

MATERIAL RECORD

QUANTITY	DESCRIPTION	COST

CUSTOMER NAME (PRINT)
CUSTOMER SIGNATURE
SERVICEMAN SIGNATURE — Frank Lopez

SERVICE PERFORMED & REMAINING S/CONTRACT -
CONTRACT PREV. MAINTENANCE ON SMOKE DETECTING DEVICE & SYSTEM. -
FIRECOM LSN 2000 MODEL - SENSITIVITY TEST / SEMIANNUALLY. -
ON FLOOR'S LISTED ABOVE / AREA. -
(*) NOTE: FREIGHT ELEV. S/D. (BURIED) ABOVE CEILING TILES. - MUST BE REMOVED / EXPOSED CEILING - (FOREST ELEC / SOLOMON). -

(A) INACCESSIBLE (B) MISSING (C) DEFECTIVE (D) OTHER

FIRE SERVICE INCORPORATED

: 22365

Subsidiary of Firecom, Inc.
39-27 Fifty Ninth Street
Woodside, New York 11377
(718) 899-2311

REPORT OF FIELD SERVICE

LOCATIONS			DEVICES			
FLOOR			Code	S/D	Sens Test
46	Elect	B	2	DAK	
	Comm	D	2	DAK	
	Freight	Elev	2	DAK	
	Elect	D	4	Pheo	
	Sec. Closet		1	DI3	
	Elect	A	1	DAK	
	Comm	A	1	DAK	
	Telph	A	2	DAK	
	Telph	D	2	DAK	
	Elect	D	2	DAK	
	Comm	D	2	DAK	
	Elev. HSuite		4	Pheo	
	Elev. ESuite		4	Pheo	
	CODE HER D/D (2)		2	Pheo	
	CODE HER Area B		2	Pheo T	
	Elect F		4	Pheo	
	Elect C		2	Pheo	
	Elev Suite		4	Pheo	
43	Freight/Pass (2)		2	DAK	
	Elect A+B (2)		2	DAK	
	Telph A+B (2)		2	DAK	
	Comm A+B (2)		2	DAK	
	Elect E		4	DAK	
	Security		4	Pheo T	
	Suite Elev		4	Pheo T	
	East HER D/D		4	Apollo	
	East HER Area		4	Apollo	

Note F Elect None S/D

Note Code 213 ON 43RD in Suite

INVOICE TO: 7WTC
NYC

SERVICEMAN ASSIGNED	SEE AT JOB SITE
F. Rosario	F.S.D.
Zuker	DATE SCHEDULED 11-8-2000
CONTRACT # Sc00818	TYPE OF SYSTEM 8500
FEE SERVICE #	P.O. #
CALL AUHTORIZED BY	PHONE / EXT

☑ MAINTENANCE ☑ TEST
☐ JOB COMPLETE ☐ JOB INCOMPLETE
☐ SYSTEM ON LINE ☐ SYSTEM OFF LINE

DEPARTED SHOP	TIME IN	TIME OUT	RETURNED SHOP	TOTAL HOURS
AM PM	8:00 AM PM	4:30 AM PM	AM PM	

MATERIAL RECORD

QUANTITY	DESCRIPTION	COST
	PREVENTIVE MAINTENANCE CONTRACT	

CUSTOMER NAME (PRINT)
CUSTOMER SIGNATURE Sean O'Keeffe
SERVICEMAN SIGNATURE Ted Lopez Linker

SERVICE PERFORMED & REMAINING

Service Contract
Preventive Maintenance Check Sensitivity Test ON
Smoke Detectors Units On 46TH AND 43rd
Floors Satisfactory Smith Bros

(A) INACCESSIBLE (B) MISSING (C) DEFECTIVE (D) OTHER

AUTHORIZATION FOR FIRE ALARM INTERRUPTION
The undersigned has been advised by Fire Service Inc. representatives that it may be necessary to interrupt the fire protection service by disconnecting the system and/or a component as the performance of their assigned work.
The undersigned hereby assumes the responsibility for the notification of the authorities at the time the interruption is initiated and will take all of the precautions deemed necessary during this period of interruption and hold harmless Fire Service Inc. and its employees regarding resumption of the protection service during their service of the equipment.

NAME DATE TIME

FIRE SERVICE INCORPORATED

SUBSIDIARY OF FIRECOM INC
39-27 FIFTY NINTH STREET
WOODSIDE, NEW YORK 11377
(718) 899-2311

55015

REPORT OF FIELD SERVICE

INVOICE TO

SERVICED
7 WORLD TRADE
& MY MY

CALL AUTHORIZED BY	CONTRACT #	FEE SERVICE #	FJ #	P O #	SEE AT JOB SITE
SHOP	SC 818				F.S.D

PHONE	EXT	DATE SCHEDULED	TIME SCHEDULED	SERVICEMAN ASSIGNED
		11-1-00	AM	C Blyth

MATERIAL RECORD

QUANTITY ISSUED	QUANTITY B/O	F C I NO	DESCRIPTION	UNIT PRICE	PER	TOTAL AMOUNT
			PREVENTIVE MAINTENANCE CONTRACT			

CHECK APPROPRIATE BOX

- ☐ Q.C
- ☐ I & T
- ☐ FEE CALL
- ☐ DELIVERY
- ☐ DEMO
- ☐ EMERGENCY CALL
- ☒ CONTRACT CALL
- ☐ PICK UP
- ☐ DEMO OWNER
- ☐ SURVEY

DEPARTED SHOP	TIME IN	TIME OUT	RETURNED SHOP	TOTAL HOURS	START MILEAGE	END MILEAGE	MISC EXPENSE	CAR FARE
800	900	400	430					
AM	AM	PM	PM					

☐ MAT REQD ☐ PARTIAL
☐ OTHER ☐ LABOR REQD

I & T COMPLETE ☐ CALL COMPLETE ☐

SERVICE DATE: 11-1-00

WILL RETURN ON

CUSTOMER SIGNATURE: Gabriel L. Villani

SERVICEMAN SIGNATURE: Calvin Blyth

AUTHORIZATION FOR FIRE ALARM INTERRUPTION

The undersigned has been advised by Fire Service, Inc. representative that it may be necessary to interrupt the fire protection service by disconnecting the system and/or a component in the performance of their assigned work.

The undersigned hereby assumes the responsibility for the notification of the authorities at the time the interruption is initiated and will take all of the precautions deemed necessary during the period of interruption and hold harmless Fire Service Inc. and its employees regarding interruption of fire protection service during their service of the equipment.

Date

PROBLEM—AS DESCRIBED: SERVICE CONTRACT

SERVICE PERFORMED: ASSIST TECH WITH TESTING ON AREA SMOK DETECTOR, AND DUCT SMOKE DETECTOR TO LOCK WORK ON MAS 45, 44 and 46 Flaor.

WORK REMAINING

FIRE SERVICE INCORPORATED

22361

Subsidiary of Firecom, Inc.
39-27 Fifty Ninth Street
Woodside, New York 11377
(718) 899-2311

REPORT OF FIELD SERVICE

LOCATIONS | **DEVICES**

INVOICE TO: T.W.T.C
N.Y.C.

FLOOR				CABLE	ADDRESS	S/D	SENS TEST
47	ELECT	A	CLOSET	2	222	BRK.	3.0
	ELECT	B	"	2	222	BRK	3.0
	ELECT	C	"	2	223	BRK	3.2
	ELECT	F	"	4	061	PEC3	3.0
	ELECT	G	"	4	035	PEC3	2.8
	TELEPH	B	"	2	222	BRK	3.0
	B STAIRWAY			2	221	EDWDS	3.2
	TELEPH	A	CLOSET	2	222	BRK	3.0
	COMM	D	"	2	223	BRK	3.0
	CUSHMAN OFFICE		AREA	4	113	EDWDS	3.0
	SHAFT/VERTICAL		CONVYR	4	068	EDWDS	3.0
	SECURITY		CLOSET	4	221	EDWDS	3.0
	ELEVATOR SHAFT		RE	4	016	PEC3T	2.8
	WEST MER			4	069	EDWDS	3.0
	W. MER D/D. 47-1			4	115	EDWDS	3.0
	CORE MER		D/D	2/023	279	PEC3T	3.0
	CORE MER		AREA	2/022	278	PEC3	3.2
	CORE MER		AREA	2/022	278	PEC3	3.2
	CORE MER		AREA	2-022	278	PEC3	3.0
47	A STAIR/ELEV S/D			2	024	BRK	3.0
48	D/D.	EF	2	4	117	EDWDS	3.2
48	D/D	AC	1	4	118	EDWDS	3.0
48	D/D	AC	2	4	118	D13B	3.2
	UNITS	REPLACED/DUE TO FALSE ACTIVATION. — RETESTED BACK TO OPERATING. —					
45	RETEST S/E - STROBE AS PER FOREST ELECT. REQUEST. —						
24	DOOR RELEASE OPERATE AS PER BLD/ ENTRANCE GLASS DOORS. —						

SERVICEMAN ASSIGNED: J. Jones / F. Rosario
SEE AT JOB SITE: F.S.I.
DATE SCHEDULED: 11-01-00
CONTRACT #: S/C 00818
TYPE OF SYSTEM: 8500
FEE SERVICE #:
P.O. #: LSW2000
CALL AUHTORIZED BY | PHONE | EXT

☐ MAINTENANCE ☐ TEST
☐ JOB COMPLETE ☐ JOB INCOMPLETE
☐ SYSTEM ON LINE ☐ SYSTEM OFF LINE

DEPARTED SHOP	TIME IN	TIME OUT	RETURNED SHOP	TOTAL HOURS
AM PM	8:00 AM PM	4:30 AM PM	AM PM	

MATERIAL RECORD

QUANTITY	DESCRIPTION	COST
	PREVENTIVE MAINTENANCE CONTRACT	

CUSTOMER NAME (PRINT)
CUSTOMER SIGNATURE
SERVICEMAN SIGNATURE

AUTHORIZATION FOR FIRE ALARM INTERRUPTION
The undersigned has been advised by Fire Service Inc. representative that it may be necessary to interrupt the fire protection service by disconnecting the system and/or a component in the performance of their assigned work.
The undersigned hereby assumes the responsibility for the notification of the authorities at the time the interruption is initiated and will take all of the precautions deemed necessary during the period of interruption and hold harmless Fire Service Inc. and its employees regarding interruption of fire protection service during their service of the equipment.

DATE
TIME
NAME

SERVICE PERFORMED & REMAINING: Service Contract for above listed floors 47th All Area S/D Detectors Sensitivity Test / Maintenance Also Test / Repair check spk / strobe 45th as Forest Request. Dub 24 th. door release as per BLD Mgt. Requested. —

S/C to Continue —

(A) INACCESSIBLE (B) MISSING (C) DEFECTIVE (D) OTHER

FIRE SERVICE INCORPORATED

: 22363

Subsidiary of Firecom, Inc.
39-27 Fifty Ninth Street
Woodside, New York 11377
(718) 899-2311

REPORT OF FIELD SERVICE

LOCATIONS | **DEVICES**

FLOOR	PLANT			CABLE	XMTR	S/D	SENS TEST
48	Area Ceiling			4	086	PEC3T	3.0
	"			4	086	PEC3T	3.0
	"			4	086	PEC3T	3.0
	"			4	086	PEC3T	3.0
	"			4	086	PEC3T	3.2
	"			4	086	PEC3T	3.0
48	D/DETECTION 48-1 AHU			4	070	EQUUS	3.4
48	"	48-1 TR		4	116	EQUUS	3.2
48	"	EF-1		4	112	EQUUS	3.4
48	"	EF-2		NO ACCESS AT THIS TIME			
48	"	AR-1		"	N/A		
48	"	AR-2		"	N/A		
44	ELECT G			4	082	PEC3	3.0
	ELECT	A		2	215	BRK	3.2
	ELECT	B		2	215	BRK	3.0
	TELEPH	A		2	215	BRK	3.2
	TELEPH	B		2	215	BRK	3.0
	COMM	B		2	215	BRK	3.2
	COMM	A		2	215	BRK	3.0
	FREIGHT ELEV			4	021	BRK	3.0
44	PASS ELEV. MAIN			4	021	BRK	3.0
	ELEV. PASS SHUTTLE			4	010	PEC3	3.2
	ELEV PASS SHUTTLE			4	018	PEC3	3.2
	SECURITY CLOSET			4	082	PEC3	3.0
	IN. MER AREA			4	034	PEC3T	3.2
	W. MER DVD			4	112	EQUUS	3.4

PREVENTIVE MAINTENANCE CONTRACT

INVOICE TO: 2 W.T.C. N.Y.C. (Sprinkler Bottom)

SERVICEMAN ASSIGNED: J. Tower / F. Rosati	SEE AT JOB SITE: F.S.I
CONTRACT #: S/C 00 818	DATE SCHEDULED: 10-31-00
FEE SERVICE #	TYPE OF SYSTEM: S.D.U.
CALL AUHTORIZED BY	P.O. #
PHONE	EXT

☒ MAINTENANCE ☐ TEST
☐ JOB COMPLETE ☐ JOB INCOMPLETE
☐ SYSTEM ON LINE ☐ SYSTEM OFF LINE

DEPARTED SHOP	TIME IN	TIME OUT	RETURNED SHOP	TOTAL HOURS
AM PM	8:00 AM PM	4:30 AM PM	AM PM	

MATERIAL RECORD

QUANTITY	DESCRIPTION	COST

CUSTOMER NAME (PRINT)
CUSTOMER SIGNATURE
SERVICEMAN SIGNATURE

AUTHORIZATION FOR FIRE ALARM INTERRUPTION
The undersigned has been advised by Fire Service Inc. representative that it may be necessary to interrupt the fire protection service by disconnecting the system and/or a component in the performance of their assigned work.
The undersigned hereby assumes the responsibility for the notification of the authorities at the time the interruption is initiated and will take all of the precautions deemed necessary during the period of interruption and hold harmless Fire Service Inc. and its employees regarding interruption of the protection service during their service of the equipment.

TIME
DATE
NAME

SERVICE PERFORMED & REMAINING: Preventive Maintenance / Sensitivity Test / Cleaned Smoke Units on 48'th M.E.R. Plant - As Listed. - (3) Ducts Detecting Pending Service Meeting Asst. Access. - Also Security 44th Area As Listed. - System Quiet / Tested LSN 2000 Model. -

(A) INACCESSIBLE (B) MISSING (C) DEFECTIVE (D) OTHER

FIRE SERVICE INCORPORATED

97635

SUBSIDIARY OF FIRECOM INC.
39-27 FIFTY NINTH STREET
WOODSIDE, NEW YORK 11377
(718) 899-2311

REPORT OF FIELD SERVICE

INVOICE TO

SERVICED
7 W.T.C.
N.Y.C.

CALL AUTHORIZED BY		CONTRACT #	FEE SERVICE #	FJ #	P O #	SEE AT JOB SITE
		SFC 00818				F.S.I.
PHONE	**EXT**	**DATE SCHEDULED**	**TIME SCHEDULED**			**SERVICEMAN ASSIGNED**
		10-30-00	AM			J. TORRES / F. ROSARIO

MATERIAL RECORD

QUANTITY ISSUED	QUANTITY B/O	FCI NO	DESCRIPTION	UNIT PRICE	PER	TOTAL AMOUNT
			PREVENTIVE MAINTENANCE CONTRACT			

CHECK APPROPRIATE BOX

- ☐ Q.C
- ☐ I & T
- ☐ FEE CALL
- ☐ DELIVERY
- ☐ DEMO
- ☐ EMERGENCY CALL
- ☒ CONTRACT CALL
- ☐ PICK UP
- ☐ DEMO OWNER
- ☐ SURVEY

DEPARTED SHOP	TIME IN	TIME OUT	RETURNED SHOP	TOTAL HOURS	START MILEAGE	END MILEAGE	MISC EXPENSE	CAR FARE
8W	9W	3:30	430					

- ☐ MAT REQD ☐ PARTIAL
- ☐ OTHER ☐ LABOR REQD

I & T COMPLETE ☐ CALL COMPLETE ☐

SERVICE DATE: 10-30-00

WILL RETURN ON:

CUSTOMER SIGNATURE:

SERVICEMAN SIGNATURE:

PROBLEM—AS DESCRIBED Service Contract / Maintenance — Repairs —

SERVICE PERFORMED As per Contract check / Repairs on 16 FL. STROBE PANEL AFC 100 Call Mgr. Tracey ext. - Unit Repaired Back to normal. — Also as per F.S.I. check / Repaired 35 FL. AFC 100 STROBE PANEL / Modifications Update P.C. Mother Board. - Rewired Back to operation. — Also check 37 FL. PAGE Trouble / STROBE PNL Trouble. — Conditions due to Construction on floor / SPKR's / Strobes Ceiling being Removed / Relocated By Forest effect. / Solvents Baffles. — System Ok / Back to operations —

WORK REMAINING

AUTHORIZATION FOR FIRE ALARM INTERRUPTION

The undersigned has been advised by Fire Service Inc. representative that it may be necessary to interrupt the fire protection service by disconnecting the system and/or a component in the performance of their assigned work.

The undersigned hereby assumes the responsibility for the notification of the authorities at the time the interruption is initiated and will take all of the precautions deemed necessary during the period of interruption and hold harmless Fire Service Inc. and its employees regarding interruption of fire protection service during their service of the equipment.

Date

Name

FCI 155
REV 6186

FIRE SERVICE INCORPORATED

97613

SUBSIDIARY OF FIRECOM INC.
39-27 FIFTY NINTH STREET
WOODSIDE, NEW YORK 11377
(718) 899-2311

REPORT OF FIELD SERVICE

INVOICE TO

SERVICED

7 W.T.C.
N.Y.C.

CALL AUTHORIZED BY	CONTRACT #	FEE SERVICE #	FJ #	P.O. #	SEE AT JOB SITE
E.T.	F/C 60818				F.S.I.

PHONE	EXT.	DATE SCHEDULED	TIME SCHEDULED	SERVICEMAN ASSIGNED
		10-25-00	AM.	J. TOWERS / A. POSADAS

MATERIAL RECORD

QUANTITY ISSUED	QUANTITY B/O	F.C.I. NO.	DESCRIPTION	UNIT PRICE	PER	TOTAL AMOUNT
			PREVENTIVE MAINTENANCE CONTRACT			

AUTHORIZATION FOR FIRE ALARM INTERRUPTION

The undersigned has been advised by Fire Service Inc. representative that it may be necessary to interrupt the fire protection service by disconnecting the system and/or a component in the performance of their assigned work.
The undersigned hereby assumes the responsibility for the notification of the authorities at the time the interruption is released and will take all of the precautions deemed necessary during the period of interruption and hold harmless Fire Service Inc. and its employees regarding interruption of fire protection service during their service of the equipment.

Name

Date

X

CHECK APPROPRIATE BOX

- ☐ O.C
- ☐ I & T
- ☐ FEE CALL
- ☐ DELIVERY
- ☐ DEMO
- ☐ EMERGENCY CALL
- ☑ CONTRACT CALL
- ☐ PICK UP
- ☐ DEMO OWNER
- ☐ SURVEY

DEPARTED SHOP	TIME IN	TIME OUT	RETURNED SHOP	TOTAL HOURS	START MILEAGE	END MILEAGE	MISC EXPENSE	CAR FARE
	900	1130						

- ☐ MAT REQD
- ☐ PARTIAL
- ☐ OTHER
- ☐ LABOR REQD

SERVICE DATE: 10-25-00

CUSTOMER SIGNATURE: Sean O'Keeffe

I & T COMPLETE ☐ CALL COMPLETE ☐

WILL RETURN ON

SERVICEMAN SIGNATURE: [signature]

PROBLEM—AS DESCRIBED Service Contract — Repairs Status -

SERVICE PERFORMED QS per Contract Check Trace) 37th Fl. Page SPK Trouble. (Floor Under Renovation). - Located Open Unit Primary Wires Fixed by Forest Electric. — 37 Floor Page Normalized - Also proceeded to Assist Fireloop Tech Igor - to Install Door Release Relay Supv. top TTB Unit Cage #1, 44th Fl. Riser. - Unit Mounting Wires Installed. — Check Supv./Release CPKO Indication O.K. — Also proceeded after to Check Printer & Unit - RA40 Unit on 44th Security Office - Wiring RA40 to Printer - Software P.C. Driver Unit S/W's Positions - Jumpers - As per Specs - Eng./Fireloop. — Unit Down / Point N/S. - Need to Check RA40 Unit - DB-25 Connected Pins

WORK REMAINING (#'s 25/17 O.K.) - Also Check For Acrylic Rack Trouble Status - Traced to 796 P.C. Card Open Jumper A5 to C.P/ALL-11 to AR4-5 Repaired O.K. — Trouble Acrylic Rack Cleared). -

FCI 155
REV 6186

FIRE SERVICE INCORPORATED

22360

Subsidiary of Firecom, Inc.
39-27 Fifty Ninth Street
Woodside, New York 11377
(718) 899-2311

10/24/00

REPORT OF FIELD SERVICE

LOCATIONS | **DEVICES**

INVOICE TO: J.W.T.C
N.Y.C.

FLOOR	AREA'S			CABLE	ADDR	S/D	SENS TEST
3	TOP ESCALATOR			1	166	BRK	3.0
	TOP ESCALATOR			1	166	BRK	3.2
3RD	ELECT.	'D' (LOCKERS)		1	165	BLK	3.0
	TELEPH	A		1	166	BLK	3.0
	ELECT	A		1	166	BLK	3.0
	CORRI	A		1	166	BLK	3.2
	CONFERENCE	B		1	166	BLK	3.2
	CORRI	B		1	166	BLK	3.2
3	ELEV. LOBBY FREIGHT			1	002	BLK	3.0
	ELEV. LOBBY PASS (4/3/4/21)				002	BLK	3.2
	ELEV. HIGH RISE 22/28			1	166	BLK	3.0
	ELEV. HIGH RISE (36-45)			1	166	BLK	3.0
	ELEV. HIGH RISE (22-23)			1	002	BLK	3.2
3	SPI- SECURITY FSD			1	109	Apollo	3.0
FLOOR	TEST	LIVE	FLOOR				
44	P.A. SPK TONES			29		P.A. SPK	TONES
43	"	"	OK	28		"	OK
42	"	"	OK	27		"	OK
41	"	"	OK	26		"	OK
40	"	"	OK	25		"	OK
39	"	"	OK				
38	"	"	OK				
37	"	"	OK				
36	"	"	OK				
35	"	"	OK				
34	"	"	OK				
33	"	"	OK				
32	"	"	OK				
31	"	"	OK				
30			OK				

SERVICEMAN ASSIGNED: J. Torres / F. Zosimis
SEE AT JOB SITE: F.S.D 10-24-00
DATE SCHEDULED: 10-24-00
CONTRACT #: S/C 00 918
TYPE OF SYSTEM: K-M 8500 / 2000
FEE SERVICE #:
PO #:
CALL AUTHORIZED BY | PHONE | EXT

☒ MAINTENANCE ☒ TEST
☐ JOB COMPLETE ☐ JOB INCOMPLETE
☐ SYSTEM ON LINE ☐ SYSTEM OFF LINE

DEPARTED SHOP	TIME IN	TIME OUT	RETURNED SHOP	TOTAL HOURS
AM PM	800 AM PM	430 AM PM	AM PM	

MATERIAL RECORD

QUANTITY	DESCRIPTION	COST
	PREVENTIVE MAINTENANCE CONTRACT	

CUSTOMER NAME (PRINT): Sean O'Keeffe
CUSTOMER SIGNATURE:
SERVICEMAN SIGNATURE: Joseph Torres / Frank Fiorello

AUTHORIZATION FOR FIRE ALARM INTERRUPTION
The undersigned has been advised by Fire Service Inc. representative that it may be necessary to interrupt the fire protection service by disconnecting the system and/or a component in the performance of their assigned work.
The undersigned hereby assumes the responsibility for the notification of the authorities at the time the interruption is initiated and will take all of the precautions deemed necessary during the period of interruption and hold harmless Fire Service Inc. and its employees regarding interruption of fire protection service during their service of the equipment.

DATE
TIME
NAME

SERVICE PERFORMED & REMAINING: Service Contract

Preventive Maintenance Smoke Sensitivity Test on Silenced Spaces as Listed / above. - System Back / Reset / - Output Functions O.K. -
NOTE: Also Placed Any Required Tones / Audio Manual Evacuation on Floor 25 Plus as Listed. (Defective No Tones on These Floors) Power Rack Audio. - Levels Adj. / Trouble

(A) INACCESSIBLE (B) MISSING (C) DEFECTIVE (D) OTHER O.K.

FIRE SERVICE INCORPORATED

22362

Subsidiary of Firecom, Inc.
39-27 Fifty Ninth Street
Woodside, New York 11377
(718) 899-2311

REPORT OF FIELD SERVICE

LOCATIONS		DEVICES					
FLOOR							
7	Area	S/D/Photo/Heat		1-046	Open -		
	AHEX	Device wiring to be Located					
7	DUCT	S/D	ANEX	1-047	Open -		
		Device wiring to be Located -					
7	FAN	SHUTDOWN	ANEX	1-050	open		
		Wiring/Relay to be Located -					
7	Damper Control/ANEX			to Location -			
	Wiring/Relay - 1-055			Open ext -			

PREVENTIVE MAINTENANCE CONTRACT

INVOICE TO:
T.W.T.C
N.Y.C (Silverstein)

SERVICEMAN ASSIGNED: J. Tokker / F. Rosario	SEE AT JOB SITE: F.S.I
	DATE SCHEDULED: 10-23-00
CONTRACT #: S/C 00 818	TYPE OF SYSTEM: LSN 2000
FEE SERVICE #	P.O. #
CALL AUHTORIZED BY	PHONE / EXT

☑ MAINTENANCE ☐ TEST
☐ JOB COMPLETE ☐ JOB INCOMPLETE
☐ SYSTEM ON LINE ☐ SYSTEM OFF LINE

DEPARTED SHOP	TIME IN	TIME OUT	RETURNED SHOP	TOTAL HOURS
800 AM/PM	900 AM/PM	7:30 AM/PM	AM/PM	

AUTHORIZATION FOR FIRE ALARM INTERRUPTION
The undersigned has been advised by Fire Service Inc. representative that it may be necessary to interrupt the fire protection service by disconnecting the system and/or a component in the performance of their assigned work.
The undersigned hereby assumes the responsibility for the notification of the authorities at the time the interruption is initiated and will take all of the precautions deemed necessary during this period of interruption and hold harmless Fire Service Inc. and its employees regarding interruption of fire protection service during their service of the equipment.

DATE X TIME NAME

MATERIAL RECORD

QUANTITY	DESCRIPTION	COST

CUSTOMER NAME (PRINT): Sean O'Leeffe
CUSTOMER SIGNATURE:
SERVICEMAN SIGNATURE: Frank Lewis

SERVICE PERFORMED & REMAINING: CHECK / All per Contract. Repairs per STATUS REPORT On 7th Fl. (COKE MEN) Area S/D (2) Units Located INSIDE CLOSET'S - Unit Discharge NO POWER wiring open loop (FROM PANEL) - Wiring need Tracing up Ceiling - Need to Locate Photo Heat Det/ANEX Cable 1 - Zone 046 Trouble & Dispt. ANEX (046) job appears to be Incomplete. FAN SHUTDOWN ANEX (-050) and Damper Control ANEX (-055) 7th Floor - Also starting to Trace Audio Tones Missing on Floors 35 up to Roof / Visit/Page 04.

(A) INACCESSIBLE (B) MISSING (C) DEFECTIVE (D) OTHER

Microphone-Page O.K. Entire Bld. - Tones Manual Evac - Defect/Missing Riser. - 1

FIRE SERVICE INCORPORATED

22386

Subsidiary of Firecom, Inc.
39-27 Fifty Ninth Street
Woodside, New York 11377
(718) 899-2311

REPORT OF FIELD SERVICE

LOCATIONS			DEVICES			
FLOOR	AREAS		S/D	CABLE	MANUF	SENS
6	SWITCHGEAR		BRK	1	171	3.0
	"		BRK	1	171	3.0
	"		BRK	1	171	3.2
	"		BRK	1	171	3.2
	"		BRK	1	171	3.0
6	H.V. VAULT	(4)	BRK	1	171	3.0
	H.V. VAULT	(4)	BRK	1	171	3.0
	H.V. VAULT	(4)	BRK	1	171	3.0
	H.V. VAULT	(1)	BRK	1	171	3.2
5	STEAM ROOM	FAN	HOCHIKI	1	223	3.4
	"	"	HOCHIKI	1	224	3.2
	"	"	HOCHIKI	1	228	3.4
	"	"	HOCHIKI	1	011	3.4
5	SWITCHGEAR	NORTH	BRK	1	170	3.0
	SWITCHGEAR	NORTH	BRK	1	170	3.0
	SWITCHGEAR	NORTH	BRK	1	170	3.2
	"	NORTH	BRK	1	170	3.2
	"	SOUTH	BRK	1	170	3.2
	"	SOUTH	BRK	1	170	3.0
	"	SOUTH	BRK	1	170	3.2
	"	SOUTH	BRK	1	170	3.0
	H.V. VAULTS	(6)	BRK	1	170	3.0 B2
	H.V. VAULTS	(6)	BRK	1	170	3.0 B2

PREVENTIVE MAINTENANCE CONTRACT

INVOICE TO: T.W.T.C. / SILVERSTEIN PROP. / N.Y.C.

SERVICEMAN ASSIGNED: J. TOWLER / F. ROSARIO	SEE AT JOB SITE: F.S.D
	DATE SCHEDULED: 10-16-00
CONTRACT #: S/C 00818	TYPE OF SYSTEM: LX N2000
FEE SERVICE #	P.O. #
CALL AUHTORIZED BY	PHONE / EXT

☐ MAINTENANCE ☐ TEST
☐ JOB COMPLETE ☐ JOB INCOMPLETE
☐ SYSTEM ON LINE ☐ SYSTEM OFF LINE

DEPARTED SHOP	TIME IN	TIME OUT	RETURNED SHOP	TOTAL HOURS
AM / PM	800 AM / PM	330 AM / PM	420 AM / PM	

MATERIAL RECORD

QUANTITY	DESCRIPTION	COST

CUSTOMER NAME (PRINT): Sean O'Keeffe
CUSTOMER SIGNATURE:
SERVICEMAN SIGNATURE: Frank Rosario

AUTHORIZATION FOR FIRE ALARM INTERRUPTION
The undersigned has been advised by Fire Service Inc. representative that it may be necessary to interrupt the fire protection service by disconnecting the system and/or a component in the performance of this assigned work.
The undersigned hereby assumes the responsibility for the notification of the authorities at the time the interruption is initiated and will take all of the precautions deemed necessary during the period of interruption and hold harmless Fire Service Inc. and its employees regarding interruption of the protection service during their service of the equipment.

NAME / DATE / TIME

SERVICE PERFORMED & REMAINING: CONTINUE S/ CONTRACT BIENNIAL TEST SENSITIVITY AS LISTED ABOVE FLOOR'S 6TH - 5TH FLOORS - H. VOLTAGE VOLTAGE VAULT & SWITCHGEAR AREA'S. SYSTEM OK/ RESETED AS OUTPUT FUNCTIONS O.K.

(A) INACCESSIBLE (B) MISSING (C) DEFECTIVE (D) OTHER

FIRE SERVICE INCORPORATED

22385

Subsidiary of Firecom, Inc.
39-27 Fifty Ninth Street
Woodside, New York 11377
(718) 899-2311

REPORT OF FIELD SERVICE

LOCATIONS			DEVICES				
FLOOR	AREAS			CODE	XMDR	S/D	SENS
9	ELEC	A		1	179	BRK	3.2
	COMM	A		1	179	BLK	3.0
	ELEC	A		1	179	BRK	3.0
	COMM	B		1	179	BRK	3.2
	ELECT	B		1	179	BLK	3.0
	TELEPH	B		1	179	BRK	3.2
	PASS	ELEV		1	008	BLK	3.0
	ELECT	C		1	178	BLK	3.2
	COMM	C		1	178	BLK	3.2
	TELEPH	C		1	178	BLK	3.0
	FREIGHT	ELEV		1	008	BLK	3.2
	RETURN	D/D	NORTH	1	238	HOSHK	3.4
	RETURN	D/D	EAST	1	238	HOSHK	3.2
	RET.	D/D	SOUTH	1	238	HOSHK	3.4
	—						
9	ELEC	D		1	178	BLK	3.0
	COMM	D		1	178	BRK	3.2
	TELEPH	D		1	178	BLK	3.0
	CORE	MEZ	D/D	1	239	HOSHK	3.2
	CORE	MEZ	D/D	1	239	HOSHK	3.2
2	TAMPER	S/W		1	123	RESET	ALM
	(SPINDLE NOT SITTING PROPERLY)						—
37	TAMPER	S/W	(CLOSE VALVE / RESTORE)				
20	TAMPER			1	146	ALM	
	DUE TO WEEP GROOVE / CUT ON SHAFT						
	NEED ADJUSTMENT			LOCKWASHER			

INVOICE TO: 7 W.T.C
N.Y.C.

SERVICEMAN ASSIGNED: J. Foley / F. Rosario	SEE AT JOB SITE: F.S.I
	DATE SCHEDULED: 10-11-00
CONTRACT #: S/C00818	TYPE OF SYSTEM: LXN 2000
FEE SERVICE #	P.O #
CALL AUHTORIZED BY	PHONE / EXT
☒ MAINTENANCE	☐ TEST
☐ JOB COMPLETE	☐ JOB INCOMPLETE
☐ SYSTEM ON LINE	☐ SYSTEM OFF LINE

DEPARTED SHOP	TIME IN	TIME OUT	RETURNED SHOP	TOTAL HOURS
800 AM/PM	800 AM/PM	430 AM/PM	AM/PM	

MATERIAL RECORD

QUANTITY	DESCRIPTION	COST
	PREVENTIVE MAINTENANCE CONTRACT	

CUSTOMER NAME (PRINT): Sean O'Keefe
CUSTOMER SIGNATURE
SERVICEMAN SIGNATURE

AUTHORIZATION FOR FIRE ALARM INTERRUPTION
The undersigned has been advised by Fire Service Inc. representatives that it may be necessary to interrupt the fire protection service by disconnecting the system and/or a component in the performance of their assigned work.
The undersigned hereby assumes the responsibility for the ramifications of the notification at the time the interruption is initiated and will take all of the precautions deemed necessary during the period of interruption and hold harmless Fire Service Inc. and its employees regarding interruption of fire protection service during their service of the equipment.

NAME DATE TIME

SERVICE PERFORMED & REMAINING: Courtesy S/Contract — Repairs
Prev. Maintenance Per Contract Check Test Security on
Devices Down Listed 9th fl. - Also Check / Repair on
Tamper S/w 6000 2nd / 20th - 37th as Required. —

(A) INACCESSIBLE (B) MISSING (C) DEFECTIVE (D) OTHER

FIRE SERVICE INCORPORATED

: 22359

Subsidiary of Firecom, Inc.
39-27 Fifty Ninth Street
Woodside, New York 11377
(718) 899-2311

REPORT OF FIELD SERVICE

LOCATIONS | **DEVICES**

FLOOR	AREA			CARD	XMTR	S/D	SENS. TEST
8	COMM	A		1	177	BLK	3.2
	ELEC	A		1	177	BLK	3.0
	TELEPH	A		1	177	BLK	3.0
	ELEC	B		1	177	BLK	3.2
	COMM	B		1	177	BLK	3.0
	TELEPH	B		1	177	BLK	3.2
	COMM	C		1	180	BLK	3.2
	ELECT	C		1	180	BLK	3.0
	TELEPH	C		1	180	BLK	3.2
	TELEPH	D		1	180	BLK	3.0
	ELECT	D		1	180	BLK	3.0
	COMM	D		1	180	BLK	3.0
	PASS	ELEV.		1	007	BLK	3.2
	FREIGHT	ELEV		1	007	BLK	3.2
	CORE	MER	D/D	1	237	Hochiki	3.4
	CORE	MER	D/D	1	237	Hochiki	3.4
	RETURN	D/D	NORTH	1	236	Hochiki	3.2
	RETURN	D/D	EAST Elite South	1	236	Hochiki	3.4
*	RETURN	D/D		NO ACCESS -			—
12	STORE PNL - Trouble / Repair (Loose Terminal P.C.)						
Lobby	F.C. STATION CRT 2000 Check. CP40 Unit —						

PREVENTIVE MAINTENANCE CONTRACT

INVOICE TO: T.W.T.C. N.Y.C

SERVICEMAN ASSIGNED: J. Torres / F. Rosario	SEE AT JOB SITE: F.S.D
	DATE SCHEDULED: 10.4-00
CONTRACT #: S/C00918	TYPE OF SYSTEM: 8500
FEE SERVICE #	P.O #
CALL AUHTORIZED BY	PHONE / EXT

☒ MAINTENANCE ☐ TEST

☐ JOB COMPLETE ☐ JOB INCOMPLETE

☐ SYSTEM ON LINE ☐ SYSTEM OFF LINE

DEPARTED SHOP	TIME IN	TIME OUT	RETURNED SHOP	TOTAL HOURS
AM PM	8:30 AM PM	4:30 AM PM	AM PM	

MATERIAL RECORD

QUANTITY	DESCRIPTION	COST

CUSTOMER NAME (PRINT): Sean O'Keeffe

CUSTOMER SIGNATURE

SERVICEMAN SIGNATURE: Anthony Jack Pearce

SERVICE PERFORMED & REMAINING: As per Method Check Tested Smoke Detectors on 8th Floor Area As Listed. - Also Operated on 12th Floor Strobe PNL's and Check's As Listed Above on F.C. Sta. / CP40 Unit. / Heads Back. System Reset Back to Operation /

AUTHORIZATION FOR FIRE ALARM INTERRUPTION
The undersigned has been advised by Fire Service Inc. representative that it may be necessary to interrupt the fire protection service by disconnecting the system and/or a component as the performance of their assigned work.
The undersigned hereby assumes the responsibility for the notification of the authorities at the time the interruption is initiated and will take all of the precautions deemed necessary during this period of interruption and hold harmless Fire Service Inc. and its employees regarding interruption of the protection service during their service of the equipment.

NAME DATE TIME

(A) INACCESSIBLE (B) MISSING (C) DEFECTIVE (D) OTHER

FIRE SERVICE INCORPORATED

52145

SUBSIDIARY OF FIRE COM INC.

39-27 FIFTY NINTH STREET
WOODSIDE, NEW YORK 11377
(718)899-2311

REPORT OF FIELD SERVICE

INVOICE TO

SERVICED

TWTC.

NEW YORK NY

CALL AUTHORIZED BY	CONTRACT #	FEE SERVICE #	FJ #	P O #	SEE AT JOB SITE
SHOP	U.P.S 818				T.S.D
PHONE / **EXT**	**DATE SCHEDULED**	**TIME SCHEDULED**			**SERVICEMAN ASSIGNED**
	9/26/2000	AM			C. FORERO & C TABARE

MATERIAL RECORD

QUANTITY ISSUED	QUANTITY B/O	F C I NO	DESCRIPTION	UNIT PRICE	PER	TOTAL AMOUNT
			PREVENTIVE MAINTENANCE CONTRACT			

CHECK APPROPRIATE BOX

- ☐ Q C
- ☐ I & T
- ☐ FEE CALL
- ☐ DELIVERY
- ☐ DEMO
- ☐ EMERGENCY CALL
- ☒ CONTRACT CALL
- ☐ PICK UP
- ☐ DEMO OWNER
- ☐ SURVEY

DEPARTED SHOP	TIME IN	TIME OUT	RETURNED SHOP	TOTAL HOURS	START MILEAGE	END MILEAGE	MISC EXPENSE	CAR FARE
80	9.15							
AM	AM							

- ☐ MAT REQD ☐ PARTIAL
- ☐ OTHER ☐ LABOR REQD

I & T COMPLETE ☐ CALL COMPLETE ☐

SERVICE DATE 9/26/2000

WILL RETURN ON

CUSTOMER SIGNATURE

SERVICEMAN SIGNATURE C. FORERO AND C TABARE

AUTHORIZATION FOR FIRE ALARM INTERRUPTION

The undersigned has been advised by Fire Service Inc. representative that it may be necessary to interrupt the fire protection service by disconnecting the system and/or a component in the performance of their assigned work.

The undersigned hereby assumes the responsibility for the notification of the authorities at the time the interruption is initiated and will take all of the precautions deemed necessary during the period of interruption and hold harmless Fire Service Inc. and its employees regarding interruption of the protection service during their service of the equipment.

Date

X

Name

PROBLEM—AS DESCRIBED U.P.S MAINTENANCE / SERVICE CONTRACT (80 BATTERIES)

SERVICE PERFORMED TOOK READING CHECKED FANS, FILTERS AND CLEANED CABINET. EACH ALL BATTERIES TEST (O.K) U.P.S IT'S OPERATIONAL (OK)

TOTAL AMPS = .3

TOTAL BATTERY VOLTAGE 146.9 DC

FREQUENCY = (60) 62.5 HZ

LOAD 1 = 11.7

LOAD 2 11.5

INPUT V/AC 208/AC

OUTPUT 245

PREVENTIVE MAINTENANCE CONTRACT

WORK REMAINING

FCI 155

FIRE SERVICE INCORPORATED

76793

SUBSIDIARY OF FIRE[illegible]M INC.

39-27 FIFTY NINTH STREET
WOODSIDE, NEW YORK 11377
(718) 899-2311

REPORT OF FIELD SERVICE

INVOICE TO

SERVICED
T.W.T.C.
N.Y.C

CALL AUTHORIZED BY	CONTRACT #	FEE SERVICE #	FJ #	P.O. #	SEE AT JOB SITE
K.W	5C00818				F.S.I.

PHONE	EXT	DATE SCHEDULED	TIME SCHEDULED	SERVICEMAN ASSIGNED
		9-27-00	A.M.	J. Torres F. Rosario

MATERIAL RECORD

QUANTITY ISSUED	QUANTITY B/O	F.C.I. NO.	DESCRIPTION	UNIT PRICE	PER	TOTAL AMOUNT
			PREVENTIVE MAINTENANCE CONTRACT			

AUTHORIZATION FOR FIRE ALARM INTERRUPTION

The undersigned has been advised by Fire Service Inc. representative that it may be necessary to interrupt the fire protection service by disconnecting the system and/or a component in the performance of their assigned work.

The undersigned hereby assumes the responsibility for the notification of the authorities at the time the interruption is initiated and will take all of the precautions deemed necessary during the period of interruption and hold harmless Fire Service Inc. and its employees regarding interruption of fire protection service during their service of the equipment.

Name

Date

CHECK APPROPRIATE BOX

- ☐ O.C
- ☐ I & T
- ☐ FEE CALL
- ☐ DELIVERY
- ☐ DEMO
- ☐ EMERGENCY CALL
- ☒ CONTRACT CALL
- ☐ PICK UP
- ☐ DEMO OWNER
- ☐ SURVEY

DEPARTED SHOP	TIME IN	TIME OUT	RETURNED SHOP	TOTAL HOURS	START MILEAGE	END MILEAGE	MISC EXPENSE	CAR FARE
	8:00	5:30						
	6:00	P.M.						

☐ MAT REQD ☐ PARTIAL
☐ OTHER ☐ LABOR REQD

SERVICE DATE: 9-27-00

WK'L RETURN ON

CUSTOMER SIGNATURE

SERVICEMAN SIGNATURE

I & T COMPLETE ☐ CALL COMPLETE ☐

PROBLEM—AS DESCRIBED To perform S/Contract - Test P.A. Panel & Fire Alarm System As Requested

SERVICE PERFORMED As F.S.I. Request (Assisted by G.C. = J.C. Hedgan / Elect. Contractor Salvatore Barbara) Test Addr. Fire Inspection on floors (31-32 + 36. Also check U.S.T. strobe lights. — NOTE: Ladies Bathroom strobe light not operational. — Also as per Contract Service Trouble Shooting 35th Fl. Sub Supply smoke panel Group. Wiring Termination Courtesy Back to Panel 2 Trouble STATES. due to Work Disabling Floors under Renovation. — Also performed 'Dry' Test on Area 1/0. Core Hr Fan Room on 43 and Area closed 40 to 42nd Fl. — (See Print out) As Requested

WORK REMAINING

FCI 155
REV 6186

FIRE SERVICE INCORPORATED

22358

Subsidiary of Firecom, Inc.
39-27 Fifty Ninth Street
Woodside, New York 11377
(718) 899-2311

REPORT OF FIELD SERVICE

LOCATIONS | **DEVICES**

FLOOR	ADDRESS			CHOKE	XTNDR	S/D	SENS TEST GRAM
7TH	ELECT	A		1	175	BLK	3.0
	CONN	A		1	175	BLK	3.0
	TELEPH	A		1	175	BLK	3.2
	PASS ELEV.			1	006	BLK	3.0
	FREIGHT ELEV.			1	006	BLK.	3.2
	CONN	B		1	175	BLK	3.0
	ELECT	B		1	175	BLK	3.0
	TELEPH	B		1	175	BLK	3.2
	TELEPH	C		1	174	BLK	3.0
	ELECT	C		1	174	BLK	3.2
	CONN	C		1	174	BLK	3.2
	TELEPH	D		1	174	BLK	3.0
	ELECT	D		1	174	BLK	3.0
	CONN	D		1	174	BLK	3.0
7TH	CORE	MEN	D/D	1	235	Hochki	3.4
	CORE	WEN	D/D	1	235	Hochki	3.4
	RETURN	D/D	NORTH	1	234	Hochki	3.2
	RETURN	D/D	SOUTH	1	234	Hochki	3.4
3RD	AREA	S/D	(2)	1	166	BLK	
	UNITS CHECK SENSITIVITY AS REQUIRED. 3.2 RANGE NORMAL						

PREVENTIVE MAINTENANCE CONTRACT

INVOICE TO: W.T.C. SILVERSTEIN PROP. N.Y.C.

SERVICEMAN ASSIGNED: J. TORRES / E. ROSARIO	SEE AT JOB SITE: F.S.D.
	DATE SCHEDULED: 9-26-00
CONTRACT #: S/C 00 818	TYPE OF SYSTEM: 8500
FEE SERVICE #: -	P.O. #
CALL AUHTORIZED BY	PHONE / EXT

☒ MAINTENANCE ☐ TEST

☐ JOB COMPLETE ☐ JOB INCOMPLETE

☐ SYSTEM ON LINE ☐ SYSTEM OFF LINE

DEPARTED SHOP	TIME IN	TIME OUT	RETURNED SHOP	TOTAL HOURS
AM / PM	800 AM / PM	42- AM / PM	AM / PM	

MATERIAL RECORD

QUANTITY	DESCRIPTION	COST

CUSTOMER NAME (PRINT): SILVERSTEIN

CUSTOMER SIGNATURE:

SERVICEMAN SIGNATURE:

SERVICE PERFORMED & REMAINING: AS PER CONTRACT SEMIANNUAL SMOKE DETECTOR ON 7TH FLOR AREAS AS LISTED ABOVE SENSITIVITY CHECK O.K. - SEE REMARKS

AUTHORIZATION FOR FIRE ALARM INTERRUPTION
The undersigned has been advised by Fire Service Inc. representative that it may be necessary to interrupt the fire protection service by disconnecting the system and/or a component in the performance of their assigned work.
The undersigned hereby assumes the responsibility for the notification of the authorities at the time the interruption is initiated and will take all of the precautions deemed necessary during the period of interruption and hold harmless Fire Service Inc. and its employees regarding interruption of the protection service during their service of the equipment.

TIME

DATE

NAME

(A) INACCESSIBLE (B) MISSING (C) DEFECTIVE (D) OTHER

FIRE SERVICE INCORPORATED

: 22356

Subsidiary of Firecom, Inc.
39-27 Fifty Ninth Street
Woodside, New York 11377
(718) 899-2311

REPORT OF FIELD SERVICE

LOCATIONS			DEVICES				
FLOOR	AREA	CLOSET		CABLE	XTNDR	S/D	SENS TEST
11	COMM	A-B	(2)	1	182	BRK	3.2/3.0
	ELECT	A-B	(2)	1	182	BRK	3.0/3.0
	TELEPH	A-B	(2)	1	182	BRK	3.2/3.0
	PASS	ELEV		1	010	BRK	3.0
	FREIGHT	ELEV		1	010	BRK	3.0
	COMM	C		1	183	BRK	3.0
	TELEPH	C		1	183	BRK	3.0
	ELECT	C		1	183	BRK	3.0
	TELEPH	D		1	183	BRK	3.0
	ELECT	D		1	183	BRK	3.2
	COMM	D		1	183	BRK	3.0
	CORE	HDR	D/D	1	243	Hochiki	3.4
LED ✱	CORE	HDR	D/D	1	243	Hochiki	3.2
	RETURN	D/D	NORTH	1	242	Hochiki	3.4
	RETURN	D/D	SOUTH	1	242	Hochiki	3.2
35	SUB SYSTEM	PRE ACTION	PNL			ALARMED	
	ZONE -	TTB	TERMINAL			CHECK	
	REPAIRS	-	O.K.	-		(4-163)	
	(2)	for	F.S.D.	-		(XTNDR -	

PREVENTIVE MAINTENANCE CONTRACT

INVOICE TO: T.W.T.C.
N.Y.C.

SERVICEMAN ASSIGNED: J. TORRES / F. ROSARIO	SEE AT JOB SITE: F.S.D.
	DATE SCHEDULED: 9-20-00
CONTRACT #: S/C00 818	TYPE OF SYSTEM: 8500
FEE SERVICE #	P.O. #
CALL AUHTORIZED BY	PHONE / EXT

☑ MAINTENANCE ☑ TEST
☐ JOB COMPLETE ☐ JOB INCOMPLETE
☐ SYSTEM ON LINE ☐ SYSTEM OFF LINE

DEPARTED SHOP	TIME IN	TIME OUT	RETURNED SHOP	TOTAL HOURS
AM PM	800 AM PM	430 AM PM	AM PM	

AUTHORIZATION FOR FIRE ALARM INTERRUPTION
The undersigned has been advised by Fire Service Inc. representative that it may be necessary to interrupt the fire protection service by disconnecting the system and/or a component in the performance of their assigned work.
The undersigned hereby assumes the responsibility for the notification of the authorities at the time the interruption is initiated and will take all of the precautions deemed necessary during the period of interruption and hold harmless Fire Service Inc. and its employees regarding interruption of fire protection service during their service of the equipment.

NAME / DATE / TIME

MATERIAL RECORD

QUANTITY	DESCRIPTION	COST

CUSTOMER NAME (PRINT): Sean O'Keeffe.
CUSTOMER SIGNATURE:
SERVICEMAN SIGNATURE: Joseph Torres / Fred Rosario

SERVICE PERFORMED & REMAINING: S/CONTRACT - Courtesy S/C Perf. Maintenance On Smoke Detection Unit on Area Locations (Above Listed.) - Floors 11th & Repairs on 35th FP Sub System Alarm. - Back to Operation.

(A) INACCESSIBLE (B) MISSING (C) DEFECTIVE (D) OTHER

(C) Pressure switch 11th floor - Broken -

FIRE SERVICE INCORPORATED

22357

Subsidiary of Firecom, Inc.
39-27 Fifty Ninth Street
Woodside, New York 11377
(718) 899-2311

REPORT OF FIELD SERVICE

LOCATIONS | **DEVICES**

FLOOR	AREAS/LOCATION			CABLE	XMTR	S/D	SENS TEST
14	CONN.	A-B	(2)	1	188	BRK	3.0/3.0
	TELEPH	A-B	(2)	1	188	BRK	3.0/3.0
	ELECT	A-B	(2)	1	188	BRK	3.2/3.0
	PASS	ELEV.	(1)	1	013	BRK	3.0
	FREIGHT	ELEV	(1)	1	013	BRK	3.2
	ELECT	C-D	(2)	1	189	BRK	3.2/3.0
	CONN	C-D	(2)	1	189	BRK	3.0/3.0
	TELEPH	C-D	(2)	1	189	BRK	3.2/3.0
	CORE	HER	D/D	1	249	HOWK	3.4
	CORE	HER	D/D	1	249	HOWK	3.4
	PLENUM	RETURN	SOUTH	1	248	HOWK	3.2
*	PLENUM	RETURN	NORTH	NO ACCESS - LOC. UNKNOWN			
12	ELECT	A-B	(2)	1	184	BRK	3.0/3.2
	CONN	A-B	(2)	1	184	BRK	3.2/3.0
	TELEPH	A-B	(2)	1	184	BRK	3.0/3.0
	PASS	ELEV	(1)	1	011	BRK	3.0
	FREIGHT	ELEV	(1)	1	011	BRK	3.2
	CORE	HER	D/D (2)	1	245	HOWK	3.4/3.2
	RETURN	PLENUM	NORTH	1	244	HOWK	3.2
	RETURN	PLENUM	SOUTH	1	244	HOWK	3.2
	ELECT	C-D	(2)	1	185	BRK	3.2/3.0
	CONN	C-D	(2)	1	185	BRK	3.2/3.2
	TELEPH	C-D	(2)	1	185	BRK	3.2/3.2

PREVENTIVE MAINTENANCE CONTRACT

INVOICE TO: 7 W.T.C.
N.Y.C.

SERVICEMAN ASSIGNED: J. FORCES / F. ROSARIO
SEE AT JOB SITE: T.S.D
DATE SCHEDULED: 9-19-00
CONTRACT #: S/C 00818
TYPE OF SYSTEM: 8500
FEE SERVICE #:
P.O. #:
CALL AUHTORIZED BY:
PHONE:
EXT:

☒ MAINTENANCE ☒ TEST
☐ JOB COMPLETE ☐ JOB INCOMPLETE
☐ SYSTEM ON LINE ☐ SYSTEM OFF LINE

DEPARTED SHOP	TIME IN	TIME OUT	RETURNED SHOP	TOTAL HOURS
800 AM/PM	900 AM/PM	430 PM	AM/PM	

MATERIAL RECORD

QUANTITY	DESCRIPTION	COST

CUSTOMER NAME (PRINT): Sean O'Keeffe
CUSTOMER SIGNATURE:
SERVICEMAN SIGNATURE:

AUTHORIZATION FOR FIRE ALARM INTERRUPTION
The undersigned has been advised by Fire Service Inc. representative that it may be necessary to interrupt the fire protection service by disconnecting the system and/or a component as the performance of their assigned work.
The undersigned hereby assumes the responsibility for the notification of the authorities at the time the interruption is initiated and will take all of the precautions deemed necessary during the period of interruption and hold harmless Fire Service Inc. and its employees regarding interruption of fire protection service during their service of the equipment.

NAME _____ DATE _____ TIME _____

SERVICE PERFORMED & REMAINING

S/CONTRACT PREV. MAINTENANCE SMOKE DETECTOR - SENSITIVITY TEST ON ALARM LOCATIONS (ABOVE LISTED) FLOOR'S 14 & 12TH FLOORS. — SYSTEM OCE/RESET - OUTPUT O.K. — BACK TO OPERATION. —

* NOTE: 14TH PLENUM RETURN D/D NORTH (NO ACCESS/LOCAT. UNK AS PREVIOUS LISTED). —

(A) INACCESSIBLE (B) MISSING (C) DEFECTIVE (D) OTHER

FIRE SERVICE INCORPORATED

22355

Subsidiary of Firecom, Inc.
39-27 Fifty Ninth Street
Woodside, New York 11377
(718) 899-2311

REPORT OF FIELD SERVICE

LOCATIONS		DEVICES					
FLOOR	ALARMS			PANEL	SYNCH	TST SENS	S/D
16	CORE HER		(1)	1	253	3.2	HOOKI
	CORE HER		(1)	1	253	3.4	HOOKI
	ELECT	A - B	(2)	1	193	3.0	BLK
	COMM	A - B	(2)	1	193	3.2	BLK
	TELEPH	A - B	(2)	1	193	3.0	BLK
	PASS	ELEV.	(1)	1	015	3.2	BLK
	FREIGHT	ELEV.	(1)	1	015	3.2	BLK
	ELECT	C - D	(2)	1	194	3.0	BLK
	COMM	C - D	(2)	1	194	3.0	BLK
	TELEPH	C - D	(2)	1	194	3.0	BLK
	PLENUM	RET. D/D NORTH		1	252	3.4	HOOKI
	4	RET - D/D SOUTH		NO ACCESS - N/A. -			
15+	CORE HER	D/D	(1)	1	251	3.4	HOOKI
*	CORE HER	D/D	(1)	1	251	3.2	HOOKI
	COMM	A-B	(2)	1	190	3.0	BLK
	ELECT	A-B	(2)	1	190	3.2	BLK
	TELEPH	A-B	(2)	1	190	3.2	BLK.
	TELEPH	C-D	(2)	1	191	3.2	BLK
	ELECT	C-D	(2)	1	191	3.2	BLK
	COMM	C-D	(2)	1	191	3.2	BLK.
	PASS	ELEV.		1	014	3.0	BLK
	FREIGHT	ELEV		1	014	3.0	BLK.
	PLENUM	RET. NORTH D/D		1	250	3.4	HOOKI
⊕	4	RET. SOUTH	N/A	NO ACCESS -			

PREVENTIVE MAINTENANCE CONTRACT

INVOICE TO: W.T.C. Prof. Silverstein Prof. N.Y.C.

SERVICEMAN ASSIGNED: J. Jones / J. Rosario	SEE AT JOB SITE: F.S.I.
	DATE SCHEDULED: 8-30-00
CONTRACT #: S/C 00818	TYPE OF SYSTEM: 8500
FEE SERVICE #	PO #
CALL AUTHORIZED BY	PHONE / EXT

☒ MAINTENANCE ☒ TEST
☐ JOB COMPLETE ☐ JOB INCOMPLETE
☐ SYSTEM ON LINE ☐ SYSTEM OFF LINE

DEPARTED SHOP	TIME IN	TIME OUT	RETURNED SHOP	TOTAL HOURS
AM / PM	8:00 AM	4:30 PM	AM / PM	

MATERIAL RECORD

QUANTITY	DESCRIPTION	COST
(2)	I.C. Prin's - Bypass. -	

CUSTOMER NAME (PRINT): SILVERSTEIN
CUSTOMER SIGNATURE:
SERVICEMAN SIGNATURE:

AUTHORIZATION FOR FIRE ALARM INTERRUPTION
The undersigned has been advised by Fire Service Inc. representatives that it may be necessary to interrupt the fire protection service by disconnecting the system and/or a component in the performance of duly assigned work.
The undersigned hereby assumes the responsibility for the notification of the authorities at the time the interruption is initiated and will take all of the precautions deemed necessary during the period of interruption and hold harmless Fire Service Inc. and its employees regarding interruption of the protection service during their service of the equipment.

NAME DATE TIME

SERVICE PERFORMED & REMAINING

S/CONTRACT -
PREV. Maintenance on Smoke Detecting System - Floors 16 & 15 & Listed Above - Units TESTED / SENSITIVITY / CLEANED - System A.K./LED'S OUTPUTS FUNCTIONS / Bypass CHECK - O.K. -
NOTE: CORE HER D/D (2) LED's N/G to Replace & Bypass. (2) 15th Fl. -
Return South Side @ 16th - 15th Fl. No access / As previous Reporting. -

(A) INACCESSIBLE (B) MISSING (C) DEFECTIVE (D) OTHER

(2) I.C.'s Prin's replaced on BP2 / Floors 20/14th Bypass Defective / Cleaned ok. -

FIRE SERVICE INCORPORATED

76792

SUBSIDIARY OF FIRE ... M INC.

39-27 FIFTY NINTH STREET
WOODSIDE, NEW YORK 11377
(718) 899-2311

REPORT OF FIELD SERVICE

INVOICE TO

SERVICED

T.W.T.C.
Silverstein Prop.
N.Y.C.

M. Carrigan

CALL AUTHORIZED BY	CONTRACT #	FEE SERVICE #	FJ #	P O #	SEE AT JOB SITE
R.T.	SC 00 818				FS-7

PHONE	EXT	DATE SCHEDULED	TIME SCHEDULED	SERVICEMAN ASSIGNED
		8-29-00	AM	J. Toles
				F. Rosario

MATERIAL RECORD

QUANTITY ISSUED	QUANTITY B/O	F C I NO	DESCRIPTION	UNIT PRICE	PER	TOTAL AMOUNT
			PREVENTIVE MAINTENANCE CONTRACT			

AUTHORIZATION FOR FIRE ALARM INTERRUPTION

The undersigned has been advised by Fire Service, Inc. representative that it may be necessary to interrupt the fire protection service by disconnecting the system and/or a component on the performance of their assigned work.

The undersigned hereby assumes the responsibility for the notification of the authorities at the time the interruption is initiated and will take all of the precautions deemed necessary during the period of interruption and hold harmless Fire Service Inc. and its employees regarding interruption of the protection service during their service of the equipment.

Date

Name

X

CHECK APPROPRIATE ITEM

- ☐ O.C
- ☐ I & T
- ☐ FEE CALL
- ☐ DELIVERY
- ☐ DEMO
- ☐ EMERGENCY CALL
- ☒ CONTRACT CALL
- ☐ PICK UP
- ☐ DEMO OWNER
- ☐ SURVEY

DEPARTED SHOP	TIME IN	TIME OUT	RETURNED SHOP	TOTAL HOURS	START MILEAGE	END MILEAGE	MISC EXPENSE	CAR FARE
	800	4:30						

- ☐ MAT REQD
- ☐ PARTIAL
- ☐ OTHER
- ☐ LABOR REQD

SERVICE DATE: 8-29-00

CUSTOMER SIGNATURE: Jimmy Carrigan

I & T COMPLETE ☐ CALL COMPLETE ☐

WILL RETURN ON

SERVICEMAN SIGNATURE: J. Toles / F. Rosario

PROBLEM—AS DESCRIBED S/ CONTRACT - SEMIANNUAL - REPAIRS -

SERVICE PERFORMED PERFORMED REPAIRS ON 44" STROBE PANEL AFC 100 - MAIN P.C. BOARD - UPDATE CHANGES - INTERMITTENT SIGNAL TROUBLE - REPLACED PART / INSTALLED - ALSO AS PER CONTRACT MAINTENANCE ON 13 FL. ALL AREAS TESTED. SMOKE DETECTORS SENSITIVITY TEST: AS: TELEPH ELEV A-B - 3.0 SENSITEST ✓ XTNDR 1-186 BLK

WORK REMAINING

13 FL	CONN. " A-B	3.2	✓	1-186 BLK
	ELECTRO " A-B	3.0	✓	1-186 BLK
	CONN & C-D	3.2	✓	1-187 BLK
	ELECT & C-D	3.0	✓	1-187 BLK
	TELEPH " C-D	3.2	✓	1-187 BLK
	PASS-ELEV.	3.0	✓	1-012 BLK
	FREIGHT ELEV	3.0	✓	1-012 BLK
↓	CORE HEAT (2) D/D	3.4	✓	1-247 HOLIKI
	PLENUM RETURN D/D NORTH	3.4	✓	1-246 HOLIKI
	PLENUM RETURN D/D SOUTH	3.4	✓	1-246 HOLIKI

FCI 155
REV 6186

FIRE SERVICE INCORPORATED : 22354

Subsidiary of Firecom, Inc.
39-27 Fifty Ninth Street
Woodside, New York 11377
(718) 899-2311

REPORT OF FIELD SERVICE

LOCATIONS		DEVICES				
FLOOR	Area/I		S/D	CABLE	XTNDR	SENS/RET
17	PASS ELEV.		BLK	1	016	3.2
	FREIGHT ELEV		BLK	1	016	3.0
	ELECT.	A	BLK	1	197	3.0
	COMM	A	BLK	1	197	3.2
	TELEPH	A	BLK	1	197	3.0
	ELECT	B	BLK	1	197	3.0
	COMM	B	BLK	1	197	3.2
	TELEPH	B	BLK	1	197	3.2
	COMM	C	BLK	1	196	3.0
	ELECT	C	BLK	1	196	3.0
	TELEPH	C	BLK	1	196	3.2
	ELECT	D	BLK	1	196	3.0
	COMM	D	BLK	1	196	3.0
	TELEPH	D	BLK	1	196	3.2
	CORE	MEN	HOWK	1	256	3.4
	CORE	HER	HOWK	1	256	3.4
17	PLENUM RET. D/D - N/A - (42) - (Plaster Ceiling - Solid) -					

INVOICE TO:
T.W.T.C. Rep.
SILVERSTEIN
N.Y.C.

SERVICEMAN ASSIGNED: J. TORRES / F. ROSARIO	SEE AT JOB SITE: F.S.I
	DATE SCHEDULED: 8-23-00
CONTRACT #: 31C00818	TYPE OF SYSTEM: 8500
FEE SERVICE #	P.O. #
CALL AUHTORIZED BY	PHONE / EXT

☑ MAINTENANCE ☒ TEST
☐ JOB COMPLETE ☐ JOB INCOMPLETE
☐ SYSTEM ON LINE ☐ SYSTEM OFF LINE

DEPARTED SHOP	TIME IN	TIME OUT	RETURNED SHOP	TOTAL HOURS
AM PM	800 AM PM	430 AM PM	AM PM	

AUTHORIZATION FOR FIRE ALARM INTERRUPTION
The undersigned has been advised by Fire Service Inc. representative that it may be necessary to interrupt the fire protection service by disconnecting the system and/or a component in the performance of their assigned work.
The undersigned hereby assumes the responsibility for the notification of the authorities at the time the interruption is initiated and will take all of the precautions deemed necessary during the period of interruption and hold harmless Fire Service Inc. and its employees regarding interruption of the protection service during their service of the equipment.

NAME _____ DATE _____ TIME _____

PREVENTIVE MAINTENANCE CONTRACT

4th STROBE PNL: CHECK/REPLACED LOW BATTERIES OUTPUT - (2) DEAD WITH 12 VOLTS - REPLACED O.K.

19th STROBE PNL: CHECK/TROUBLESHOOT (2) BATTERIES REPLACED LOW IN TROUBLE OUTPUT (12 VOLTS) O.K.

MATERIAL RECORD

QUANTITY	DESCRIPTION	COST
4	12 VOLT BATTERIES	69.95
—	(STROBES PNL'S) —	

CUSTOMER NAME (PRINT): SILVERSTEIN
CUSTOMER SIGNATURE: [signature]
SERVICEMAN SIGNATURE: [signature] Jack Rosario

SERVICE PERFORMED & REMAINING: Certify S/Contract!

PREVENTIVE MAINTENANCE SMOKE DETECTION UNITS ON 17TH FLR. AREAS (ABOVE LISTED) CLOSE FIRE ALARM SYSTEM. - UNITS ON WORKSHEET - PLENUM D/D N/A - GAS PIPING - SYSTEM TEST/INSP. ALSO REPAIRED/REPLACED BATTERIES FOR STROBES PNL'S

(A) INACCESSIBLE (B) MISSING (C) DEFECTIVE (D) OTHER

On Floor 11th - 19th - Units -

FIRE SERVICE INCORPORATED

22353

Subsidiary of Firecom, Inc.
39-27 Fifty Ninth Street
Woodside, New York 11377
(718) 899-2311

REPORT OF FIELD SERVICE

LOCATIONS | **DEVICES**

FLOOR	AREAS			S/D	CABLE	XTNSN	TST MEAN
19TH	ELEV	PASS		BRK	1	018	√ 3.2
	TELEPH	A-B	(2)	BRK	1	201	3.0
	COMM	A-B	(2)	BRK	1	201	3.0
	ELECT.	A-B	(2)	BRK	1	201	3.2
	CORE MER	D/D		HOCHKI	1	260	3.2
	CORE MER	D/D		HOCHKI	1	260	3.4
	ELEV.	FREIGHT		BRK	1	018	3.0
	PLENUM	RET. D/D	South	HOCHKI	1	259	3.4
	"	RET. D/D	North	HOCHKI	1	259	3.4
	ELECT	C-D	(2)	BRK	1	200	3.2
	COMM	C-D	(2)	BRK	1	200	3.0
19TH	TELEPH	C-D	(2)	BRK	1	200	3.0
18	ELECT	A-B	(2)	BRK	1	199	3.2
	COMM	A-B	(2)	BRK	1	199	3.0
	TELEPH	A-B	(2)	BRK	1	199	3.2
	PASS	ELEV.		BRK	1	017	3.0
	FREIGHT	ELEV		BRK	1	017	3.2
	CORE	MER D/D		HOCHKI	1	258	3.4
	CORE	MER D/D		HOCHKI	1	258	3.4
	TELEPH	C-D	(2)	BRK	1	198	3.2
	ELECT	C-D	(2)	BRK	1	198	3.0
	COMM	C-D	(2)	BRK	1	198	3.0
	PLENUM	RET D/D	N.	HOCHKI	1	257	3.4
18TH	PLENUM	RET D/D	South	HOCHKI	1	257	3.4

INVOICE TO:
7 W.T.C
Silverstein Properties
N.Y.C.

SERVICEMAN ASSIGNED	SEE AT JOB SITE
J. Torres	F.S.D
F. Rosario	DATE SCHEDULED 8-22-00
CONTRACT # S1C00818	TYPE OF SYSTEM 8J00
FEE SERVICE #	P.O. #
CALL AUHTORIZED BY	PHONE / EXT

☒ MAINTENANCE ☒ TEST
☐ JOB COMPLETE ☐ JOB INCOMPLETE
☐ SYSTEM ON LINE ☐ SYSTEM OFF LINE

DEPARTED SHOP	TIME IN	TIME OUT	RETURNED SHOP	TOTAL HOURS
AM PM	800 AM PM	430 AM PM	AM PM	

MATERIAL RECORD

QUANTITY	DESCRIPTION	COST
	PREVENTIVE MAINTENANCE CONTRACT	

AUTHORIZATION FOR FIRE ALARM INTERRUPTION
The undersigned has been advised by Fire Service Inc. representative that it may be necessary to interrupt the fire protection service by disconnecting the system and/or a component in the performance of their assigned work.
The undersigned hereby assumes the responsibility for the notification of the authorities at the time the interruption is initiated and will take all of the precautions deemed necessary during this period of interruption and hold harmless Fire Service Inc. and its employees regarding interruption of the protection service during their service of the equipment.

NAME _____ DATE _____ TIME _____

CUSTOMER NAME (PRINT) SILVERSTEIN
CUSTOMER SIGNATURE
SERVICEMAN SIGNATURE

SERVICE PERFORMED & REMAINING
Service Contract
Preventive Maintenance on Smoke Detection Units on Floors (Above Listed)
Class "E" Fire Equipment System - Units in working order - System left in Normal
Back to operation.
to be Cont. Next Division.

(A) INACCESSIBLE (B) MISSING (C) DEFECTIVE (D) OTHER

FIRE SERVICE INCORPORATED

22352

Subsidiary of Firecom, Inc.
39-27 Fifty Ninth Street
Woodside, New York 11377
(718) 899-2311

REPORT OF FIELD SERVICE

LOCATIONS | **DEVICES**

FLOOR	AREAS			S/D	CABLE	ZONE/DR	TST/CLEAN
20	PASS	ELEV.		BLK	1	019	3.0
	FREIGHT	ELEV.		BLK	1	019	3.0
	COMM	A			1	203	3.2
	ELECT	A			1	203	3.0
	TELEPH	A			1	203	3.2
	COMM	B			1	203	3.0
	ELECT	B			1	203	3.2
	TELEPH	B			1	203	3.0
	TELEPH	C			1	202	3.0
	ELECT	C			1	202	3.2
	COMM	C			1	202	3.0
	ELECT	D			1	202	3.0
	TELEPH	D			1	202	3.2
	COMM	D			1	202	3.0
	CORE AREA	D/D		HAWK	1	262	3.4
	CORE AREA	D/D		HAWK	1	262	3.2
	RETURN	D/D	NORTH	HAWK	1	261	3.2
	RETURN	D/D	SOUTH	HAWK	1	261	3.4
20	RETURN	D/D	EAST	HAWK	3	045	
13	STROBE PWR	AFC100	Replaced	(2) BATTERIES			
	12 VOLTS -	BACK UP POWER	-	O.K.	-		
44	STROBE PWR	AFC100	TRouble STATUS	(4-370)			
	NEEDING	(2) BATTERIES	12 VOLTS	UNITS			
	TO BE	Replaced	-				

INVOICE TO: T.W.T.C.
N.Y.C.

SERVICEMAN ASSIGNED: J. TORRES / F. ROSARIO	SEE AT JOB SITE: F.S.I.
	DATE SCHEDULED: 8-16-00
CONTRACT #: S/C 818	TYPE OF SYSTEM: 8500
FEE SERVICE #	P.O. #
CALL AUHTORIZED BY	PHONE / EXT
☒ MAINTENANCE	☐ TEST
☐ JOB COMPLETE	☐ JOB INCOMPLETE
☐ SYSTEM ON LINE	☐ SYSTEM OFF LINE

DEPARTED SHOP	TIME IN	TIME OUT	RETURNED SHOP	TOTAL HOURS
AM / PM	800 AM / PM	430 AM / PM	AM / PM	

AUTHORIZATION FOR FIRE ALARM INTERRUPTION
The undersigned has been advised by Fire Service Inc. representative that it may be necessary to interrupt the fire protection service by disconnecting the system and/or a component in the performance of their assigned work.
The undersigned hereby assumes the responsibility for the notification of the authorities at the time the interruption is initiated and will take all of the precautions deemed necessary during this period of interruption and hold harmless Fire Service Inc. and its employees regarding interruption of fire protection service during their service of the equipment.

NAME / DATE / TIME

MATERIAL RECORD

QUANTITY	DESCRIPTION	COST
2	12 VOLTS BATTERIES	69.95

PREVENTIVE MAINTENANCE CONTRACT

CUSTOMER NAME (PRINT): Sean O'Keeffe.
CUSTOMER SIGNATURE:
SERVICEMAN SIGNATURE: J. Torres - Jack Torres

SERVICE PERFORMED & REMAINING: Routine Scheduled - Preventive Maintenance on Smoke Detection Units & Equipment on 20th (as listed). - Also Repairs on 13th Floor / 44th Pending - (2) BATTERIES Back up Units Needed - 12 VOLTS. -

(A) INACCESSIBLE (B) MISSING (C) DEFECTIVE (D) OTHER

FIRE SERVICE INCORPORATED

22351

Subsidiary of Firecom, Inc.
39-27 Fifty Ninth Street
Woodside, New York 11377
(718) 899-2311

REPORT OF FIELD SERVICE

LOCATIONS | **DEVICES**

FLOOR				S/D	Code	XMTR	TST SENS.
22	FREIGHT ELEV.			BRK	1	021	3.0
	PASS ELEV.	D1 3		BRK	1	021	3.0
	COMM	'A'		BRK	1	207	3.0
	ELECT	'A'		BRK	1	207	3.2
	TELEPH	'A'		BRK	1	207	3.2
	COMM	'B'		BRK	1	207	3.0
	ELECT	'B'		BRK	1	207	3.2
	TELEPH	'B'		BRK	1	207	3.0
	ELECT	'C'		BRK	1	206	3.0
	TELEPH	'C'		BRK	1	206	3.0
	COMM	'C'		BRK	1	206	3.2
	TELEPH	'D'		BRK	1	206	3.2
	ELECT	'D'		BRK	1	206	3.0
	COMM	D		BRK	1	206	3.0
	COLE HER D/D			Honeywell	1	266	4.0
	COLE HER D/D			Honeywell	1	266	3.8
(+)	RETURN SOUTH	(LED)		Honeywell	1	265	3.8
	RET. NORTH			Honeywell	1	265	3.8
21	ELECT.	A-B	(2)	BRK	1	204	3.0/3.0
	TELEPH	A-B	(2)	BRK	1	204	3.2/3.0
	COMM	A-B	(2)	BRK	1	204	3.0/3.0
	ELECT	C-D	(2)	BRK	1	205	3.0/3.2
	COMM	C-D	(2)	BRK	1	205	3.0/3.0
	TELEPH	C-D	(2)	BRK	1	205	3.2/3.0
	COLE HER D/D			Honeywell	1	264	3.4
	COLE HER D/D			Honeywell	1	264	3.4
(+)	RETURN D/D	NORTH LED		Honeywell	1	263	3.4
	RETURN D/D	SOUTH		Honeywell	1	263	3.4
	PASS ELEV.			BRK.	1	020	3.2
	FREIGHT ELEV			BRK	1	020	3.0

PREVENTIVE MAINTENANCE CONTRACT

INVOICE TO: 7 W.T.C.
N.Y.C.
FSI: J. Corrigan

SERVICEMAN ASSIGNED: J. TOLLES / F ROSARIO
SEE AT JOB SITE: F.S.D.
DATE SCHEDULED: 8-15-00
CONTRACT #: S/C00818
TYPE OF SYSTEM: 8500
FEE SERVICE #:
P.O. #:
CALL AUHTORIZED BY | PHONE | EXT

☒ MAINTENANCE ☒ TEST
☐ JOB COMPLETE ☐ JOB INCOMPLETE
☐ SYSTEM ON LINE ☐ SYSTEM OFF LINE

DEPARTED SHOP	TIME IN	TIME OUT	RETURNED SHOP	TOTAL HOURS
AM PM	800 AM PM	430 AM PM	AM PM	

MATERIAL RECORD

QUANTITY	DESCRIPTION	COST

CUSTOMER NAME (PRINT): Sean O'Keeffe
CUSTOMER SIGNATURE
SERVICEMAN SIGNATURE

AUTHORIZATION FOR FIRE ALARM INTERRUPTION
The undersigned has been advised by Fire Service Inc. representative that it may be necessary to interrupt the fire protection service by disconnecting the system and/or a component in the performance of their assigned work.
The undersigned hereby assumes the responsibility for the notification of the authorities at the time the interruption is initiated and will take all of the precautions deemed necessary during the period of interruption and hold harmless Fire Service Inc. and its employee regarding interruption of the protection service during their service of the equipment.

NAME DATE TIME

SERVICE PERFORMED & REMAINING: Courtesy S/Contract - Preventive Maintenance
on Smoke Detectors all Brk Hoods 22/21st Fl. -
(+) = 22nd + 21st Fl. LED's to replace (light Indicating N/G). -
to Continue. -

(A) INACCESSIBLE (B) MISSING (C) DEFECTIVE (D) OTHER

FIRE SERVICE INCORPORATED

22350

Subsidiary of Firecom, Inc.
39-27 Fifty Ninth Street
Woodside, New York 11377
(718) 899-2311

REPORT OF FIELD SERVICE

LOCATIONS			DEVICES				
FLOOR	AREA			S/D	CABLE	KINDR	TEST SENS
24	ELEV. Lobby Pass			BRK	2	001	3.0
	COMM	A		BLK	2	172	3.0
	ELECT	A		BLK	2	172	3.2
	TELEPH	A		BLK	2	172	3.0
	COMM	B		BLK	2	172	3.2
	ELECT	B		BLK	2	172	3.0
	TELEPH	B		BLK	2	172	3.0
	RETURN D/D NORTH			HOOKUP	2	230	3.4
	RETURN D/D SOUTH			HOOKUP	2	230	3.2
(A)	FREIGHT ELEV.			BLK	2	001	4.0 (C)
	COMM	C		BLK	2	171	3.0
	ELECT	C		BLK	2	171	3.2
(A)	TELEPH	C		BLK	2	171	3.4 (C)
	TELEPH	D		BLK	2	171	3.0
	ELECT	D		BLK	2	171	3.2
	COMM	D		BLK	2	171	3.0
	CORE	MEN D/D		HOOKUP	2	231	3.2
	CORE	MEN D/D		HOOKUP	2	231	3.4
47	E.M.R. AREA S/D (XR) UNIT RETESTED						
	DUE TO SMOKE CONDITION AS BLD MANAGER REQUEST. - SENSITIVITY CHECK / NORMAL LEVEL (3.0 SENS. FINISH WORK). - UNITS DIDN'T ACTIVATED POSSIBLE DUE TO AIR FANS BLOWN ON FLOOR PUSHING AIR / SMOKE AWAY FROM UNITS. SUGGESTED TO INSTALL ONE (1) EXTRA UNIT CENTER OF ROOM - DUE TO SIZE OF ROOM. -						
15	STROBE PANEL (Replaced) INSTALLED (2) NEW 12VOLTS BATTERIES. - PANEL RESET BACK TO NORMAL. -						

INVOICE TO: TWT-C. Silverstein Prop. N.Y.C.

F.S.D.

SERVICEMAN ASSIGNED: J. Torres, Parker Thames	SEE AT JOB SITE: 8-9-00
	DATE SCHEDULED: 8-9-00
CONTRACT #: S/C 00 818	TYPE OF SYSTEM: 8500
FEE SERVICE #	P.O. #
CALL AUHTORIZED BY	PHONE / EXT

☒ MAINTENANCE ☐ TEST
☐ JOB COMPLETE ☐ JOB INCOMPLETE
☐ SYSTEM ON LINE ☐ SYSTEM OFF LINE

DEPARTED SHOP	TIME IN	TIME OUT	RETURNED SHOP	TOTAL HOURS
AM PM	8:00 AM PM	4:30 AM PM	AM PM	

MATERIAL RECORD

QUANTITY	DESCRIPTION	COST
2	12VOLT BATTERIES	
	PREVENTIVE MAINTENANCE CONTRACT	

CUSTOMER NAME (PRINT): Sean O'Keefe.
CUSTOMER SIGNATURE:
SERVICEMAN SIGNATURE:

AUTHORIZATION FOR FIRE ALARM INTERRUPTION
The undersigned has been advised by Fire Service Inc. representatives that it may be necessary to interrupt the fire protection service by disconnecting the system and/or a component in the performance of their assigned work.
The undersigned hereby assumes the responsibility for the satisfaction of the authorities at the time the interruption is restored and will take all of the precautions deemed necessary during the period of interruption and hold harmless Fire Service Inc. and its employees regarding interruption of fire protection service during their service of the equipment.

NAME / DATE / TIME

SERVICE PERFORMED & REMAINING: Courtesy Annual Maintenance 24 Hr. all Areas S/D. As Listed Above. SENSITIVITY TEST / CHECK. - NOTE: UNITS (A) TO BE RETESTED / SENS. to be to High As per location. - Also Check's Done on 47 Fl as Bld Request - & Repairs on 15 Fl. AFC. Strobe Panel's Batteries Replaced due to Low output Voltages. -

(A) INACCESSIBLE (B) MISSING (C) DEFECTIVE (D) OTHER

FIRE SERVICE INCORPORATED

22349

Subsidiary of Firecom, Inc.
39-27 Fifty Ninth Street
Woodside, New York 11377
(718) 899-2311

REPORT OF FIELD SERVICE

LOCATIONS				DEVICES			
FLOOR				S/D	CAB/K	ZONE	TST/CLEAN
25	ELECT	B		BRK	2	174	3.2
	COMM	B		BRK	2	174	3.0
	TELEPH	B		BRK	2	174	3.0
	PASS ELEV.			BRK	2	002	3.2
	FREIGHT ELEV			EDWDS	2	002	3.0
	COMM	A		BRK	2	174	3.2
	ELECT	A		BRK	2	174	3.0
	TELEPH	A		BRK	2	174	3.0
	ELEC	C		BRK	2	173	3.2
	COMM	C		BRK	2	173	3.0
	TELEPH	C		BRK	2	173	3.0
	TELEPH	D		BRK	2	173	3.0
	ELECT	D		BRK	2	173	3.2
	COMM	D		BRK	2	173	3.0
	RETURN D/D		NORTH	HOLLIKI	2	232	3.4
	RETURN D/D		SOUTH.	HOLLIKI	2	232	3.4
25	CORE/ELEV	D/D		HOLLIKI	2	233	3.4
	CORE/ELEV	D/D.		HOLLIKI	2	233	3.2
16	STROBE PNL	TROUBLE / CHECK'S DONE					DC.
		REPLACED / SIGNAL OUTPUT.					- OC.
15	STROBE PNL	BATTERIES NEEDED (2) 12VDC					
		(BACK UP UNITS)					

INVOICE TO: T.W.T.C.
N.Y.C.

SERVICEMAN ASSIGNED: J. TOLLES / C. TAMBRES	SEE AT JOB SITE: F.S.D
	DATE SCHEDULED: 8-8-00
CONTRACT #: S/C00818	TYPE OF SYSTEM: 8500
FEE SERVICE #	P.O #
CALL AUHTORIZED BY	PHONE / EXT

☒ MAINTENANCE ☐ TEST
☐ JOB COMPLETE ☐ JOB INCOMPLETE
☐ SYSTEM ON LINE ☐ SYSTEM OFF LINE

DEPARTED SHOP	TIME IN	TIME OUT	RETURNED SHOP	TOTAL HOURS
AM / PM	800 AM/PM	430 PM	AM / PM	

AUTHORIZATION FOR FIRE ALARM INTERRUPTION
The undersigned has been advised by Fire Service Inc. representative that it may be necessary to interrupt the fire protection service by disconnecting the system and/or a component in the performance of their assigned work.
The undersigned hereby assumes the responsibility for the notification of the authorities at the time the interruption is initiated and will take all of the precautions deemed necessary during the period of interruption and hold harmless Fire Service Inc. and its employees regarding interruption of fire protection service during their service of the equipment.

NAME _____ DATE _____ TIME _____

MATERIAL RECORD

QUANTITY	DESCRIPTION	COST
	PREVENTIVE MAINTENANCE CONTRACT	

CUSTOMER NAME (PRINT): Sean O'Keeffe.
CUSTOMER SIGNATURE
SERVICEMAN SIGNATURE

SERVICE PERFORMED & REMAINING

Courtesy yearly (2) TEST Sensitivity cleaning of smoke detectors this on 25th Fl. All found as listed. - Also replaced on 16th + 15th Fl. STROBE PNLS. - (2) BATTERIES to be replaced on 15th Fl. (STROBE PNL)

(A) INACCESSIBLE (B) MISSING (C) DEFECTIVE (D) OTHER

FIRE SERVICE INCORPORATED

90405

SUBSIDIARY OF FIRECOM INC.
39-27 FIFTY NINTH STREET
WOODSIDE, NEW YORK 11377
(718) 899-2311

REPORT OF FIELD SERVICE

INVOICE TO

SERVICED
W.T.C.
N.Y.C

CALL AUTHORIZED BY	CONTRACT #	FEE SERVICE #	FJ #	P O #	SEE AT JOB SITE
	S/C 00 818				F.J.

PHONE	EXT	DATE SCHEDULED	TIME SCHEDULED	SERVICEMAN ASSIGNED
		8-2-00	A.M.	J. Davies / F. Rosario

MATERIAL RECORD

QUANTITY ISSUED	QUANTITY B/O	FCI NO	DESCRIPTION	UNIT PRICE	PER	TOTAL AMOUNT
5			387 Bulbs (Bypass pnl's) -	N/C		
					PREVENTIVE MAINTENANCE CONTRACT	

AUTHORIZATION FOR FIRE ALARM INTERRUPTION

The undersigned has been advised by Fire Service, Inc. representative that it may be necessary to interrupt the fire protection service by disconnecting the system and/or a component in the performance of their assigned work.

The undersigned hereby assumes the responsibility for the notification of the authorities at the time the interruption is initiated and will take all of the precautions deemed necessary during the period of interruption and hold harmless Fire Service Inc. and its employees regarding interruption of fire protection service during their service of the equipment

Date

X

Name

CHECK APPROPRIATE BOX

- ☐ O C
- ☐ I & T
- ☐ FEE CALL
- ☐ DELIVERY
- ☐ DEMO
- ☐ EMERGENCY CALL
- ☑ CONTRACT CALL
- ☐ PICK UP
- ☐ DEMO OWNER
- ☐ SURVEY

DEPARTED SHOP	TIME IN	TIME OUT	RETURNED SHOP	TOTAL HOURS	START MILEAGE	END MILEAGE	MISC EXPENSE	CAR FARE
	8N	430						

☐ MAT RECD ☐ PARTIAL
☐ OTHER ☐ LABOR RECD

SERVICE DATE: 8-2-00

CUSTOMER SIGNATURE: Sean O'Keeffe

I & T COMPLETE ☐ CALL COMPLETE ☐

WILL RETURN ON

SERVICEMAN SIGNATURE

PROBLEM—AS DESCRIBED: Service Contract / Status Repairs. ~~Trouble Shooting~~. - Trouble.

SERVICE PERFORMED: As per Contract - Trouble shooting & Repairs done as:
45th Fl TAMPER S/W 2-147 Transponder - Reset O.K.
42nd Fl TAMPER S/W 1-139 Transponder - Reset O.K..
34th Fl W/Flow S/W. 2-099. Transponder - Reset O.K -
20th Fl TAMPER S/W 1-143 Transponder - Reset O.K -
Ground Locate on 'B' Riser Stair Standpipe. -
Also Replaced (5) Lamps/Bulbs on F.C. Station Bypass panel's/Floor's -
NOTE: Live Test/Solomon Floors 42+43rd A.C. Shutdowns - Postponed For New Date.

WORK REMAINING: After Hours as per Mr. J. Hazzard / Mr Campbell - Saboteur Keith Bonney + Ralph Hall Warrington. - Firemen will be Notified. -

FCI 155
REV 6186

FIRE SERVICE INCORPORATED

90404

SUBSIDIARY OF FIRECOM INC.
39-27 FIFTY NINTH STREET
WOODSIDE, NEW YORK 11377
(718) 899-2311

REPORT OF FIELD SERVICE

INVOICE TO

SERVICED

7 W.T.C.
SILVERSTEIN PROPERTIES —
N.Y.C.

CALL AUTHORIZED BY	CONTRACT #	FEE SERVICE #	FJ #	PO #	SEE AT JOB SITE
R.T.	S/C 00 818				F.S.7

PHONE	EXT	DATE SCHEDULED	TIME SCHEDULED	SERVICEMAN ASSIGNED
		8-1-00	AM	J. TORRES. F. ROSARIO

MATERIAL RECORD

QUANTITY ISSUED	QUANTITY B/O	FCI NO	DESCRIPTION	UNIT PRICE	PER	TOTAL AMOUNT
15			7387 LAMPS Display F.C.S.	N/C		

PREVENTIVE MAINTENANCE CONTRACT

CHECK APPROPRIATE BOX

- ☐ Q.C
- ☐ I & T
- ☐ FEE CALL
- ☐ DELIVERY
- ☐ DEMO
- ☐ EMERGENCY CALL
- ☒ CONTRACT CALL
- ☐ PICK UP
- ☐ DEMO OWNER
- ☐ SURVEY

DEPARTED SHOP	TIME IN	TIME OUT	RETURNED SHOP	TOTAL HOURS	START MILEAGE	END MILEAGE	MISC EXPENSE	CAR FARE
	8 AM	4:30						

- ☐ MAT REQD ☐ PARTIAL
- ☐ OTHER ☐ LABOR REQD

SERVICE DATE: 8-1-00

WILL RETURN ON:

I & T COMPLETE ☐ CALL COMPLETE ☐

CUSTOMER SIGNATURE: Sean O'Keeffe

SERVICEMAN SIGNATURE:

AUTHORIZATION FOR FIRE ALARM INTERRUPTION

The undersigned has been advised by Fire Service Inc. representative that it may be necessary to interrupt the fire protection service by disconnecting the system and/or a component in the performance of their assigned work.

The undersigned hereby assumes the responsibility for the notification of the authorities at the time the interruption is initiated and will take all of the precautions deemed necessary during the period of interruption and hold harmless Fire Service Inc. and its employees regarding interruption of protection service during their service of the equipment

Date X

Name

PROBLEM—AS DESCRIBED SERVICE CONTRACT. —

SERVICE PERFORMED As per Contract attend keeping on 36th Fl. page. - Trace wiring found open wires (Broken) by speaker/strobe (North west wall). - Also attend for Instrument 7239 P.O. at F.C. station 9th Fl. page / Repairing I.C. 4512 Replaced - Back to operation. - Fire Command station Display Lamps (Burned out) replaced 7387 type - (11) Units replaced and test station. - (4) 7387 Clear Lamp stations - Replaced back to operation. - NOTE: As per conversation with Mr. Jerry Mazzano Certificate Warranty - Silverstein Prop. - Separate TEST / LIVE SHUTDOWNS for 42 & 43 Fl. as requested by D. Trevino Firewey. - Sy Tomorrow 8-2-00 / 9:00 AM. -

WORK REMAINING Coding S/C. —

FCI 155
REV 6186

FIRE SERVICE INCORPORATED

90403

SUBSIDIARY OF FIRECOM INC.
39-27 FIFTY NINTH STREET
WOODSIDE, NEW YORK 11377
(718) 899-2311

REPORT OF FIELD SERVICE

INVOICE TO

SERVICED
T.W.T.C.
Silverstein Properties
N.Y.C.

CALL AUTHORIZED BY		CONTRACT #	FEE SERVICE #	FJ #	P O #	SEE AT JOB SITE
L.T.		S/C 00 818				F.J.D.
PHONE	**EXT**	**DATE SCHEDULED**	**TIME SCHEDULED**			**SERVICEMAN ASSIGNED**
		7-31-00	AM			J. Torres F. Rosario

MATERIAL RECORD

QUANTITY ISSUED	QUANTITY B/O	FCI NO	DESCRIPTION	UNIT PRICE	PER	TOTAL AMOUNT
2			(12 VLT) Batteries Stock Pnl AFC100	6995		

PREVENTIVE MAINTENANCE CONTRACT

CHECK APPROPRIATE BOX

- ☐ Q C
- ☐ I & T
- ☐ FEE CALL
- ☐ DELIVERY
- ☐ DEMO
- ☐ EMERGENCY CALL
- ☒ CONTRACT CALL
- ☐ PICK UP
- ☐ DEMO OWNER
- ☐ SURVEY

DEPARTED SHOP	TIME IN	TIME OUT	RETURNED SHOP	TOTAL HOURS	START MILEAGE	END MILEAGE	MISC EXPENSE	CAR FARE
8AM	9AM	3:30 PM.						

☐ MAT RECD ☐ PARTIAL ☐ OTHER ☐ LABOR RECD

I & T COMPLETE ☐ CALL COMPLETE ☐

SERVICE DATE 7-31-00

WILL RETURN ON

CUSTOMER SIGNATURE Sean Overeff.

SERVICEMAN SIGNATURE

PROBLEM—AS DESCRIBED S/Contract - Repairs -

SERVICE PERFORMED As per Contract / Repairs done on 45th St Stock panel (3) panel AFC-100 Intermittent. - Signal Trouble - Panel Reboot - changes done/updated - Initially Alarm back to Operation; also Batteries (2) Units 12 Volts. Replaced). - Also As per Stock Office Report on 22nd Fl. AFC 101 panel (2) - Touch Condition Both Side - Panel. - Output Voltage Office Battery. - Low. - Back to operation. - North Side Unit Found Loose Connection on Unit Ceiling Type. - (East Side.) Also - Repairs back to operation. - System OK / Reset back to operation

WORK REMAINING Contact - S/C.

FCI 155
REV 6186

AUTHORIZATION FOR FIRE ALARM INTERRUPTION

The undersigned has been advised by Fire Service Inc. Representative that it may be necessary to interrupt the fire protection service by disconnecting the system and/or a component in the performance of their assigned work.

The undersigned hereby assumes the responsibility for the notification of the authorities at the time the interruption is initiated and will take all of the precautions deemed necessary during the period of interruption and hold harmless Fire Service Inc. and its employees regarding interruption of fire protection service during their service of the equipment.

Date

Name

FIRE SERVICE INCORPORATED

22347

Subsidiary of Firecom, Inc.
39-27 Fifty Ninth Street
Woodside, New York 11377
(718) 899-2311

REPORT OF FIELD SERVICE

LOCATIONS | **DEVICES**

FLOOR			CABLE	ZONE	
45	D/DETECTOR		4 - 125	= WIRES PULLOUT NOT LONGER TTB	
45	D/DETECTOR		4 - 126	= WIRES PULLOUT TTB NOT LONGER	
44	S/SYSTY		4 - 228	WIRES PULL OUT TTB NOT LONGER	
45	FAN SHUTDOWN STATUS TT-45-2		4 - 345	WIRES PULL OUT NOT LONGER TTB	
45	FAN SHUTDOWN STATUS		4 - 350	WIRES PULL OUT TTB NOT LONGER	
45	STROBE PULL STATION (PA2-2)		4 - 359	E.O.L. DEVICE WRONG VALUE/CONNECTED (UNIT REMOVED) PA2-2	
43	TAMPER SW		4 - 439	WIRES PULL OUT TTB NOT LONGER	

INVOICE TO:
J.W.T.C
N.Y.C

SERVICEMAN ASSIGNED: J. TORRES, H. ROSARIO	SEE AT JOB SITE: F.J.
	DATE SCHEDULED: Zinger A. 7-26-00
CONTRACT #: S/C 00 818	TYPE OF SYSTEM: 8 DV
FEE SERVICE #	P.O. #
CALL AUHTORIZED BY	PHONE / EXT

☒ MAINTENANCE ☒ TEST
☐ JOB COMPLETE ☐ JOB INCOMPLETE
☐ SYSTEM ON LINE ☐ SYSTEM OFF LINE

DEPARTED SHOP	TIME IN	TIME OUT	RETURNED SHOP	TOTAL HOURS
AM PM	8 AM PM	4:30 AM PM	AM PM	

MATERIAL RECORD

QUANTITY	DESCRIPTION	COST
	PREVENTIVE MAINTENANCE CONTRACT	

CUSTOMER NAME (PRINT): P. Keller (For J Cerup)
CUSTOMER SIGNATURE: (For J Cerup)
SERVICEMAN SIGNATURE:

AUTHORIZATION FOR FIRE ALARM INTERRUPTION
The undersigned has been advised by Fire Service Inc. representative that it may be necessary to interrupt the fire protection service by disconnecting the system and/or a component in the performance of their assigned work.
The undersigned hereby assumes the responsibility for the notification of the authorities at the time the interruption is initiated and will take all of the precautions deemed necessary during this period of interruption and hold harmless Fire Service Inc. and its employees regarding interruption of the protection service during their service of the equipment.

TIME
DATE
NAME

SERVICE PERFORMED & REMAINING: As per Contract - Check Trouble History / Correct Any Short Circuits / TTB's Check For Wiring / Pull Out Units Not Longer On Field Detect. - Also Correcting Wiring on PA2-2 Strobe Panel Adding on 45R. Wrong End of Line Resistor (1.8) Found On Relay Interface Terminal - Placed 3.9K Ω E.O.L. & Unit Rewired. - Check Back to Normal. - Also As per Mr. P. Keller will Fireguy Forman Reevaluate Fire Command Station Blue Prints / With Existing Labeling / Diagram Boards / Functions

(A) INACCESSIBLE (B) MISSING (C) DEFECTIVE (D) OTHER

- Copy Returned to Shop / Fireguy -

FIRE SERVICE INCORPORATED

80966

SUBSIDIARY OF FIRECOM INC.

39-27 FIFTY NINTH STREET
WOODSIDE, NEW YORK 11377
(718) 899-2311

REPORT OF FIELD SERVICE

INVOICE TO

SERVICED

7 W.T.C.

N.Y.C. -

CALL AUTHORIZED BY	CONTRACT #	FEE SERVICE #	FJ #	P O #	SEE AT JOB SITE
R.T.	S/C 00818				F.S.D

PHONE	EXT	DATE SCHEDULED	TIME SCHEDULED	SERVICEMAN ASSIGNED
		7-25-00	A.M.	L. TORRES F. ROSARIO

MATERIAL RECORD

QUANTITY ISSUED	QUANTITY B/O	FCI NO	DESCRIPTION	UNIT PRICE	PER	TOTAL AMOUNT
			PREVENTIVE MAINTENANCE CONTRACT			

AUTHORIZATION FOR FIRE ALARM INTERRUPTION

The undersigned has been advised by Fire Service, Inc. representative that it may be necessary to interrupt the fire protection service by disconnecting the system and/or a component in the performance of their assigned work.

The undersigned hereby assumes the responsibility for the notification of the authorities at the time the interruption is initiated and will take all of the precautions deemed necessary during the period of interruption and hold harmless Fire Service Inc. and its employees regarding interruption of fire protection service during their service of the equipment.

Date

Name

CHECK APPROPRIATE BOX

- ☐ Q.C
- ☐ I & T
- ☐ FEE CALL
- ☐ DELIVERY
- ☐ DEMO
- ☐ EMERGENCY CALL
- ☒ CONTRACT CALL
- ☐ PICK UP
- ☐ DEMO OWNER
- ☐ SURVEY

DEPARTED SHOP	TIME IN	TIME OUT	RETURNED SHOP	TOTAL HOURS	START MILEAGE	END MILEAGE	MISC EXPENSE	CAR FARE
	800	430						

- ☐ MAT REQD
- ☐ PARTIAL
- ☐ OTHER
- ☐ LABOR REQD.

SERVICE DATE: 7-25-00

CUSTOMER SIGNATURE: T. Kelly (Fr Servs)

I & T COMPLETE ☐ CALL COMPLETE ☐

WILL RETURN ON

SERVICEMAN SIGNATURE

PROBLEM—AS DESCRIBED S/CONTRACT - REPAIR STROBE LIGHT / RANGE'S - CKT'S. 32ND. LEAVING FAULT CONDITION. - 47TH. S/DETECTOR AREA. -

SERVICE PERFORMED CONTRACT REPAIR 32ND FL. STROBE LIGHT CKT #1. TRACE LOCATE NEGATIVE WIRE / GROUND ON EXISTING CEILING SPEAKER / STROBE WHITE UNIT. - - REMOVE WIRE REMOVE TO INSTALL NEW CEILING TILES. - CONNECTION REMADE CKT BACK TO NORMAL / TESTED O.K. - ALSO CHECK 47TH FL. 'B' COMMUNICATING CKT S/DETECTOR NOT OPERATING. - N/G. - UNABLE TO REACH UNIT DUE TO CEILING PIPES IN WAY. - ACCESS MUST BE PROVIDED BY BLD. - TO CUT HOLE ON WALL NEAR S/D. FOR PURPOSE TO GET TO REMOVE UNIT ATTACH BASE WIRING. -

WORK REMAINING CONTRACT S/C.

FCI 155

FIRE SERVICE INCORPORATED 76790

SUBSIDIARY OF FIRECOM INC.
39-27 FIFTY NINTH STREET
WOODSIDE, NEW YORK 11377
(718) 899-2311

REPORT OF FIELD SERVICE

INVOICE TO

SERVICED
7 W. T.C.
N.Y.C.

CALL AUTHORIZED BY	CONTRACT #	FEE SERVICE #	FJ #	P O #	SEE AT JOB SITE
P.T.	S/C 00 818				

PHONE	EXT.	DATE SCHEDULED	TIME SCHEDULED	SERVICEMAN ASSIGNED
		7-19-00	9A	J. Tosh / F. Rosario

MATERIAL RECORD

QUANTITY ISSUED	QUANTITY B/O	F.C.I. NO	DESCRIPTION	UNIT PRICE	PER	TOTAL AMOUNT
			PREVENTIVE MAINTENANCE CONTRACT			

CHECK APPROPRIATE BOX

- ☐ Q.C
- ☐ I & T
- ☐ FEE CALL
- ☐ DELIVERY
- ☐ DEMO
- ☐ EMERGENCY CALL
- ☑ CONTRACT CALL
- ☐ PICK UP
- ☐ DEMO OWNER
- ☐ SURVEY

DEPARTED SHOP	TIME IN	TIME OUT	RETURNED SHOP	TOTAL HOURS	START MILEAGE	END MILEAGE	MISC EXPENSE	CAR FARE
	8N	430						

☐ MAT REQD ☐ PARTIAL
☐ OTHER ☐ LABOR REQD

SERVICE DATE: 7-19-00

CUSTOMER SIGNATURE: Pete (Fire Cmpt)

I & T COMPLETE ☐ CALL COMPLETE ☐

WILL RETURN ON

SERVICEMAN SIGNATURE: J. Tosh / F. Rosario

AUTHORIZATION FOR FIRE ALARM INTERRUPTION

The undersigned has been advised by Fire Service Inc. representative that it may be necessary to interrupt the fire protection service by disconnecting the system and/or a component in the performance of their assigned work.

The undersigned hereby assumes the responsibility for the notification of the authorities at the time the interruption is initiated and will take all of the precautions deemed necessary during the period of interruption and hold harmless Fire Service Inc. and its employees regarding interruption of the protection service during their service of the equipment.

Name

Date

X

PROBLEM—AS DESCRIBED: Service Contract —

SERVICE PERFORMED: As per Contract performed Check Trouble shooting Repairs on Strobe panel unit on 32nd Fl. Check for CKT #1 Grounding Fault. - E.O.L. placed at Terminal. - (FURTHER Trouble shooting necessary on CKT #1 in order to locate Unit / Units grounded. -) Flow Retardation / Egress. - Also Visited Desk Robert Dakoshy Checking Activation / output 'DRY' - on Floor's 42nd / 43 At Lobby Stair / R.W. - Fireman - See Print Out - Submitted by Desk. - Smoke Det. Activity Various CKTS. / Zones on Floor's -

WORK REMAINING: Contract —

FCI 155
REV 6/86

FIRE SERVICE INCORPORATED 76789

SUBSIDIARY OF FIRECOM INC.

39-27 FIFTY NINTH STREET
WOODSIDE, NEW YORK 11377
(718) 899-2311

REPORT OF FIELD SERVICE

INVOICE TO

SERVICED
7 W.T.C.
N.Y.C.

CALL AUTHORIZED BY	CONTRACT #	FEE SERVICE #	FJ #	P.O. #	SEE AT JOB SITE
TOT.	SC 00 818				F.S.I

PHONE	EXT	DATE SCHEDULED	TIME SCHEDULED	SERVICEMAN ASSIGNED
		7-18-00		J. Tracy F. Rosado

MATERIAL RECORD

QUANTITY ISSUED	QUANTITY B/O	FCI NO	DESCRIPTION	UNIT PRICE	PER	TOTAL AMOUNT
			PREVENTIVE MAINTENANCE CONTRACT			

AUTHORIZATION FOR FIRE ALARM INTERRUPTION

The undersigned has been advised by Fire Service, Inc. representative that it may be necessary to interrupt the fire protection service by disconnecting the system and/or a component in the performance of their assigned work.

The undersigned hereby assumes the responsibility for the notification of the authorities at the time the interruption is initiated and will take all of the precautions deemed necessary during the period of interruption and hold harmless Fire Service Inc. and its employees regarding interruption of the protection service during their service of the equipment.

Date

X

Name

CHECK APPROPRIATE BOX

- ☐ Q.C
- ☐ I & T
- ☐ FEE CALL
- ☐ DELIVERY
- ☐ DEMO
- ☐ EMERGENCY CALL
- ☑ CONTRACT CALL
- ☐ PICK UP
- ☐ DEMO OWNER
- ☐ SURVEY

DEPARTED SHOP	TIME IN	TIME OUT	RETURNED SHOP	TOTAL HOURS	START MILEAGE	END MILEAGE	MISC EXPENSE	CAR FARE
800	900	430						

- ☐ MAT RECD ☐ PARTIAL
- ☐ OTHER ☐ LABOR RECD

I & T COMPLETE ☐ CALL COMPLETE ☐

SERVICE DATE 7-18-00

WILL RETURN ON

CUSTOMER SIGNATURE P Kuell (For J. Caruffi)

SERVICEMAN SIGNATURE

PROBLEM—AS DESCRIBED Service Contract. / Strobes Lights Flashes Units —

SERVICE PERFORMED As per Contract preformed check's Report on 15th fl. Strobe panel Trouble Activation. — AFC 100 Unit opposing P.C. And Batteries Replaced Voltage increase to 28.99 VDC. — Backup — Normalized also Strobe Light CKT #1 on 12th fl. panel - Found Unit Wiring loose. — Corrected. — Units Back to operating. — AFC 101 #1 System Unit Back to Operating. —

WORK REMAINING

FCI 155
REV 6186

FIRE SERVICE INCORPORATED

22345

Subsidiary of Firecom, Inc.
39-27 Fifty Ninth Street
Woodside, New York 11377
(718) 899-2311

REPORT OF FIELD SERVICE

LOCATIONS		DEVICES				
FLOOR	FREIGHT AREA	T.S. CLOCK	TTB'S		STROBE/HORN	
6	'B' CONN.	✓	TTB	(1)	AFC 101	(1)
	CORE NER	✓	TTB	(1) C3		
	'B' STAIR		TTB	(1) 2/C41		
5	W. HER (SCHWAB)	✓	TTB (1)	DIC1		
	W. HER (SCHWAB)	✓	TTB (1)	C3		
	'B' STAIR	✓	TTB (1)	DIC1		
4	'B' CONN	✓	—		AFC 100	(1)
3	'B' STAIR	✓	TTB (1)	DIC1		
	'B' CONN.	✓			AFC 100	(1)
2	FREIGHT AREA	✓			AFC 100	(1)
1	UTILITY (BROWN)	—				
	PUMP RM	✓	TTB (1)	DIC1		
	PUMP RM	✓			AFC 100	(1)
		—	—	—		
B	F.C. STA. BY PASS PNL. RELAMP. (Relamp) (4) LIGHTS					

INVOICE TO:
T.W.T.C.
N.Y.C.

SERVICEMAN ASSIGNED	SEE AT JOB SITE
J. TORRES / F. ROSARIO	F.S.I.
CONTRACT #	DATE SCHEDULED
S/C 00 818	7-12-00
FEE SERVICE #	TYPE OF SYSTEM
	8J00
CALL AUTHORIZED BY	P.O. #
	PHONE / EXT

☒ MAINTENANCE ☐ TEST
☐ JOB COMPLETE ☐ JOB INCOMPLETE
☐ SYSTEM ON LINE ☐ SYSTEM OFF LINE

DEPARTED SHOP	TIME IN	TIME OUT	RETURNED SHOP	TOTAL HOURS
AM PM	800 AM PM	430 AM PM	AM PM	

AUTHORIZATION FOR FIRE ALARM INTERRUPTION
The undersigned has been advised by Fire Service Inc. representative that it may be necessary to interrupt the fire protection service by disconnecting the system and/or a component in the performance of this assigned work.
The undersigned hereby assumes the responsibility for the notification of the authorities at the time the interruption is initiated and will take all of the precautions deemed necessary during the period of interruption and hold Interstate Fire Service Inc. and its employees regarding interruption of fire protection service during this service of the equipment.

NAME / DATE / TIME

MATERIAL RECORD

QUANTITY	DESCRIPTION	COST
3	LAMPS 387 1BY PASS PNL.	N/C

PREVENTIVE MAINTENANCE CONTRACT

CUSTOMER NAME (PRINT) PRINTED (For J Cornyen)
CUSTOMER SIGNATURE
SERVICEMAN SIGNATURE

SERVICE PERFORMED & REMAINING S/CONTRACT.

PREV Maintenance on TTB's Risers & Strobe Panel's & Listen Voltages / Signals / Audibles effect. Wiring / Battery check. Act Reset Back to operation

(A) INACCESSIBLE (B) MISSING (C) DEFECTIVE (D) OTHER

FIRE SERVICE INCORPORATED

22346

Subsidiary of Firecom, Inc.
39-27 Fifty Ninth Street
Woodside, New York 11377
(718) 899-2311

REPORT OF FIELD SERVICE

LOCATIONS		DEVICES			
FLOOR	AREAS	TTB'S		STDS PULL	TST & CLEAN
11	'B' COMM			AFC 101 (2)	✓
				(2 BATTERIES Replaced).	
10	N/A	UNAVOIDABLE		—	
9	N/A PREVENTIVE MAINTENANCE CONTRACT			—	
8	'B' COMM			AFC 101 (1)	✓
7	'B' COMM			AFC 101 (1)	✓
7	CORE HER	TTB (1)	D1C1		✓
6	'B' COMM			AFC 100 (1)	
6	'B' STAIR	TTB (1)	D1C1		✓
6	ENG. HEA RM	TTB (1)	D3C3		✓
5	'B' COMM			AFC 100 (1) Disable/Ext	
5	'B' STAIR	TTB (1)	D1C1		✓
3	W. HER.	TTB (2)	D3C3		✓
4	'B' COMM			AFC 100 (1)	✓
3	'B' COMM			AFC 100 (1)	✓
3	'B' STAIR	TTB (1)	D1C1		✓
2	FREIGHT AREA			AFC 100 (1)	✓
1	PUMP RM	TTB (1)	D1C1		✓
1	PUMP RM.			AFC 100 (1)	✓

INVOICE TO: 7 W.T.C
N.Y.C.

SERVICEMAN ASSIGNED: Q. TORRES / F. ROSARIO	SEE AT JOB SITE: F.S.D.
	DATE SCHEDULED: 7-11-00
CONTRACT #: S/C 00 818	TYPE OF SYSTEM: 8500
FEE SERVICE #	P.O. #
CALL AUHTORIZED BY	PHONE / EXT

☑ MAINTENANCE ☑ TEST
☐ JOB COMPLETE ☐ JOB INCOMPLETE
☐ SYSTEM ON LINE ☐ SYSTEM OFF LINE

DEPARTED SHOP	TIME IN	TIME OUT	RETURNED SHOP	TOTAL HOURS
AM PM	800 AM	430 PM	AM PM	

MATERIAL RECORD

QUANTITY	DESCRIPTION	COST
2	12 VOLT 7 AH BATTERIES	@ 69.75
	PREVENTIVE MAINTENANCE CONTRACT	

CUSTOMER NAME (PRINT): PAT KINZELL (For J. Corrigan)
CUSTOMER SIGNATURE: Pat Kinzell
SERVICEMAN SIGNATURE: Q. Torres / Frank Lomeo

AUTHORIZATION FOR FIRE ALARM INTERRUPTION
The undersigned has been advised by Fire Service Inc. representative, that it may be necessary to interrupt the fire protection service by disconnecting the system and/or a component in the performance of their assigned work.
The undersigned hereby assumes the responsibility for the notification of fire authorities at the time the interruption is initiated and will take all of the precautions deemed necessary during the period of interruption and hold harmless Fire Service Inc. and its employees regarding interruption of fire protection service during their service of the equipment.

NAME _____ DATE _____ TIME _____

SERVICE PERFORMED & REMAINING: S/CONTRACT -

PREVENTIVE MAINTENANCE ON TTB'S (Units) / STATES PULL ROOMS (Hallway / Segment Check) - Batteries Back Up (Replaced) (2) (11th FL LISTER) - System Reset Back to operation

(A) INACCESSIBLE (B) MISSING (C) DEFECTIVE (D) OTHER

FIRE SERVICE INCORPORATED

22344

Subsidiary of Firecom, Inc.
39-27 Fifty Ninth Street
Woodside, New York 11377
(718) 899-2311

REPORT OF FIELD SERVICE

LOCATIONS			DEVICES				
FLOOR				TTB's		STRB/PAL	TEST OKAY
30	CORE HER				(1)	AFC 100	✓
19	CORE HER				(1)	AFC 100	✓
18	CORE HER		(1)	TTB DIC1	(2)	AFC 100	✓
			(1)	TTB D3C3			
17	CORE HER				(1)	AFC 100	✓
16	CORE HER				(1)	AFC 100	✓
15	CORE HER		(2)	TTB DIC1	(1)	AFC 100	✓
			(1)	TTB D3C3			
14	CORE HER				(1)	MAZ	✓
13	'B' COMM				(1)	AFC 100	✓
	'C' ELEC				(1)	AFC 101	✓
12	CORE HER		(2)	TTB DIC1			
			(1)	TTB D3C3			
12	'B' COMM.				(2)	AFC 101	✓
⊛ 22	STORE PNL - SOUTH		(2)	BATT. REPLACED	-	12 VOLT 7 AMP	

INVOICE TO: T.W.T.C. / N.Y.C

SERVICEMAN ASSIGNED: J. TOLEDO / C. TABARES	SEE AT JOB SITE: F.S.I
	DATE SCHEDULED: 7-5-00
CONTRACT #: S/C 00 818	TYPE OF SYSTEM: 8500
FEE SERVICE #	P O #
CALL AUHTORIZED BY	PHONE / EXT

☑ MAINTENANCE ☒ TEST
☐ JOB COMPLETE ☐ JOB INCOMPLETE
☐ SYSTEM ON LINE ☐ SYSTEM OFF LINE

DEPARTED SHOP	TIME IN	TIME OUT	RETURNED SHOP	TOTAL HOURS
AM/PM	8:00 AM/PM	4:30 AM/PM	AM/PM	

MATERIAL RECORD

QUANTITY	DESCRIPTION	COST
2	BATTERIES 12V 7 AMP. (STORE PNL) - L	@ 69 95
	PREVENTIVE MAINTENANCE CONTRACT	

CUSTOMER NAME (PRINT): SILVERST Legal
CUSTOMER SIGNATURE:
SERVICEMAN SIGNATURE:

SERVICE PERFORMED & REMAINING: Regd. MAINTENANCE - As per Checklist Check/Test Batteries / Sequence on TTB's Risers & STROBE PANEL'S on Floors Absolute Listing. - System Act/Test - in operation + 22nd FL. (2) Batteries Replaced. - OK. -

AUTHORIZATION FOR FIRE ALARM INTERRUPTION
The undersigned has been advised by Fire Service Inc. representative that it may be necessary to interrupt the fire protection service by disconnecting the system and/or a component in the performance of their assigned work.
The undersigned hereby assumes the responsibility for the notification of the authorities at the time the interruption is initiated and will take all of the precautions deemed necessary during the period of interruption and hold harmless Fire Service Inc. and its employees regarding interruption of fire protection service during their service of the equipment.

NAME DATE TIME

(A) INACCESSIBLE (B) MISSING (C) DEFECTIVE (D) OTHER

FIRE SERVICE INCORPORATED

22343

Subsidiary of Firecom, Inc.
39-27 Fifty Ninth Street
Woodside, New York 11377
(718) 899-2311

REPORT OF FIELD SERVICE

LOCATIONS			DEVICES				
FLOOR				TTB'S		STROBE/PULL	73T Clear
26	CORE HER				(1) PYRO 3		✓
25	CORE HER				(1) AFC100		✓
24	CORE HER.		(2) TTB'S DIC1 (1) TTB DIC3		(1) AFC100		✓
23	N/A AT THIS TIME. (MAYOR'S OFFICE)						
22	'B' ROOM				(2) AFC101 (4) BATT. NEEDED (1) SLF.		✓
21	CORE HER		(1) TTB DIC (1) TTB DIC 3		(1) AFC100		✓

INVOICE TO: TWTC
N.Y.C

SERVICEMAN ASSIGNED: J. Tower E. Tobias
SEE AT JOB SITE: F.S.I.
DATE SCHEDULED: 7.3.00
CONTRACT #: S/C 00 818
TYPE OF SYSTEM: 8500
FEE SERVICE #:
P.O. #:
CALL AUHTORIZED BY:
PHONE:
EXT:

☒ MAINTENANCE ☒ TEST
☐ JOB COMPLETE ☐ JOB INCOMPLETE
☐ SYSTEM ON LINE ☐ SYSTEM OFF LINE

DEPARTED SHOP	TIME IN	TIME OUT	RETURNED SHOP	TOTAL HOURS
8:00 AM PM	9:00 AM PM	3:30 AM PM	AM PM	

MATERIAL RECORD

QUANTITY	DESCRIPTION	COST
	PREVENTIVE MAINTENANCE CONTRACT	

CUSTOMER NAME (PRINT): SILVERSTEIN
CUSTOMER SIGNATURE:
SERVICEMAN SIGNATURE:

AUTHORIZATION FOR FIRE ALARM INTERRUPTION
The undersigned has been advised by Fire Service Inc. representative that it may be necessary to interrupt the fire protection service by disconnecting the system and/or a component in the performance of their assigned work.
The undersigned hereby assumes the responsibility for the notification of the authorities at the time the interruption is invested and will take all of the precautions deemed necessary during the period of interruption and hold harmless Fire Service Inc. and its employees regarding interruption of fire protection service during their service of the equipment.

NAME DATE TIME

SERVICE PERFORMED & REMAINING: S/CONTROLS - PREV. MAINTENANCE CHECK ON TTB'S RISERS PANEL'S CHIPS. - / STROBES LIGHTS PANEL'S on FLOOR'S ABOVE LISTED. — VOLTAGE / SIGNAL'S READINGS TAKEN - / BATTERY CHECK — BOOSTER CHECK.
AS: 22ND FL. STROBE PULL 'SOUTH' AFC101 NEEDS (2) BATTERIES 12 VOLTS. 7 AMP/H. — TO REPLACE. —

(A) INACCESSIBLE (B) MISSING (C) DEFECTIVE (D) OTHER

FIRE SERVICE INCORPORATED

22341

Subsidiary of Firecom, Inc.
39-27 Fifty Ninth Street
Woodside, New York 11377
(718) 899-2311

REPORT OF FIELD SERVICE

LOCATIONS			DEVICES			
FLOOR			TTB's		STROBES	TST CLEANS
	B' COMM. (CLOSET)					
31	'B' COMM		(1) TTB 22 A/B 23C3		AFC 100 (1)	✓
					(1) Battery Replaced	DISABLED
30	'B' COMM				(1) AFC 100	✓
					(2) Batteries Replaced OK	
30	CORE HER		(1) TTB DK1 #13 A/B - KEY C[illegible]			
29	'B' COMM.				AFC 100 (1) OK.	✓
28	'B' COMM.		(1) TTB 23C3 #21 A/B		AFC 100 (1)	✓
27	CORE HER		(1) TTB #12 A/B		RLO 3 FLOOR OK.	✓
32	FLOOR PAGE / BACK TO NORMAL / RESET (CLOCK REGULATED)					

PREVENTIVE MAINTENANCE CONTRACT

INVOICE TO: J.W.T.C. N.Y.C

SERVICEMAN ASSIGNED	SEE AT JOB SITE
J. TOUHEY / C. TABACK	F.S.I
DATE SCHEDULED	6-28-00
CONTRACT #	S/C 00 818
TYPE OF SYSTEM	8 V T
FEE SERVICE #	P O #
CALL AUHTORIZED BY	PHONE / EXT

☐ MAINTENANCE ☒ TEST
☐ JOB COMPLETE ☐ JOB INCOMPLETE
☐ SYSTEM ON LINE ☐ SYSTEM OFF LINE

DEPARTED SHOP	TIME IN	TIME OUT	RETURNED SHOP	TOTAL HOURS
AM PM	708 AM PM	430 AM PM	AM PM	

AUTHORIZATION FOR FIRE ALARM INTERRUPTION
The undersigned has been advised by Fire Service Inc. representative that it may be necessary to interrupt the fire protection service by disconnecting the system and/or a component in the performance of their assigned work.
The undersigned hereby assumes the responsibility for the notifications of the occurrence of this time the interruption is initiated and will take all of the precautions deemed necessary during the period of interruption and hold harmless Fire Service Inc. and its employees regarding interruption of fire protection service during their service of the equipment.

NAME / DATE / TIME

MATERIAL RECORD

QUANTITY	DESCRIPTION	COST
4	BATTERIES 12 VOLTS.	69.95
—	ST ROSER PANEL (AFC 100)	

CUSTOMER NAME (PRINT) SILVERSTEIN
CUSTOMER SIGNATURE
SERVICEMAN SIGNATURE

SERVICE PERFORMED & REMAINING S/CONTRACT.
CHECK/REPAIR ON TTB'S / STROBES PANELS OF PREV. MAINTENANCE AS PER LISTING ABOVE ALSO BATTERIES REPLACED ON 3 PANELS (LOW VOLTAGE) (2) UNITS ON 30TH FL STROBE PANEL & 31ST FL.

(A) INACCESSIBLE (B) MISSING (C) DEFECTIVE (D) OTHER

NOTE: 31ST FL. PANEL DISABLED due to SHORTED CKT 'A'/B ON STROBES LOOP'S —

FIRE SERVICE INCORPORATED

22342

Subsidiary of Firecom, Inc.
39-27 Fifty Ninth Street
Woodside, New York 11377
(718) 899-2311

REPORT OF FIELD SERVICE

LOCATIONS		DEVICES		
FLOOR			TTB'S	STROBE P/S
35	B COMM			STROBE P/S. ✓ (2) BATT. to Replace
33	B COMM			(2) BATT. Replaced STROBE P/S
33	CORE MECH	(1) TTB D/C2 # KEY Cylinder Locked.		✓
32	B COMM	(1) TTB D3C3 # 23A/8		(1) Strobe P/S AFC 100 ✓
31	B COMM.			(1) STROBE P/S ✓ (2) BATT. Repl. AFC 100
37	B COMM			(1) AFC 100, STROBE ✓ (2) BATT. Replaced OK
36	B COMM			(1) STROBE P/S ✓ (2) BATTERIES Replaced

PREVENTIVE MAINTENANCE CONTRACT

INVOICE TO: W.T.C

W.T.C

SERVICEMAN ASSIGNED: J. TORREY / C. TABACCO	SEE AT JOB SITE: FSI
	DATE SCHEDULED: 6-27-00
CONTRACT #: SIC00818	TYPE OF SYSTEM: 8500
FEE SERVICE #	P.O. #
CALL AUHTORIZED BY	PHONE / EXT

☐ MAINTENANCE ☐ TEST
☐ JOB COMPLETE ☐ JOB INCOMPLETE
☐ SYSTEM ON LINE ☐ SYSTEM OFF LINE

DEPARTED SHOP	TIME IN	TIME OUT	RETURNED SHOP	TOTAL HOURS
800 AM PM	910 AM PM	430 AM PM	AM PM	

MATERIAL RECORD

QUANTITY	DESCRIPTION	COST
4	BATT. 12V/7A.	69.95
	STROBE P/S (AFC100)	

CUSTOMER NAME (PRINT): SILVERSTEIN

CUSTOMER SIGNATURE

SERVICEMAN SIGNATURE

AUTHORIZATION FOR FIRE ALARM INTERRUPTION
The undersigned has been advised by Fire Service Inc. representative that it may be necessary to interrupt the fire protection service by disconnecting the system and/or a component in the performance of their assigned work.
The undersigned hereby assumes the responsibility for the notifications of the authorities at the time the interruption is initiated and will take all of the precautions deemed necessary during the period of interruption and hold harmless Fire Service Inc. and its employees regarding interruption of the protection service during their service of the equipment.

NAME DATE TIME

SERVICE PERFORMED & REMAINING: S/C.

Perf. Maintenance Check / Repairs on TTB's & Strobe P/S's on Floors Above Listing. — Batteries Replaced Also. — (Low Voltage) —

(A) INACCESSIBLE (B) MISSING (C) DEFECTIVE (D) OTHER

FIRE SERVICE INCORPORATED

22340

Subsidiary of Firecom, Inc.
39-27 Fifty Ninth Street
Woodside, New York 11377
(718) 899-2311

REPORT OF FIELD SERVICE

LOCATIONS		DEVICES			
FLOOR		TTB's		STROBE'S	TST MAINT
38	FREIGHT AREA 'B' COMM.	TTB 24A/B (1)		AFC 100 (1) ✓	
		D3-4		✱ BATT. NEED	
37	FREIGHT AREA 'B' COMM	TTB 25 A/B		AFC 100 (1) ✓	
		D3-4	(1)	✱ BATT. NEED	
36	FREIGHT AREA 'B' COMM			AFC 100 (1) ✓	
				✱ BATT. NEEDED	
36	SOUTH SIDE (WALL JOSET)	TTB/OPP. SOUTH (1)			✓
		D1-2 # 15 A-B			
35	FREIGHT AREA 'B' COMM			AFC 100 (1) ✓	
				✱ BATT. NEEDED	
34	COPY DITO 'B' COMM. CONFIRM EAST	TTB D3-4		AFC (100) ✓	
		24A/B		AFC (102) ✓	
				AFC (10) ✓	
33	FREIGHT AREA 'B' COMM.			AFC 100 ✓	
				✱ BATT. NEEDED	
33	CORE HER	✱ TTB (N/A) PENDING.			

INVOICE TO: 7W.T.C
N.Y.C.

SERVICEMAN ASSIGNED: J. TORRES / F. ROSARIO	SEE AT JOB SITE: F.S.I.
	DATE SCHEDULED: 6-21-00
CONTRACT #: S/C 00818	TYPE OF SYSTEM: 850
FEE SERVICE #	P.O. #
CALL AUTHORIZED BY	PHONE / EXT
☑ MAINTENANCE	☑ TEST
☐ JOB COMPLETE	☐ JOB INCOMPLETE
☐ SYSTEM ON LINE	☐ SYSTEM OFF LINE

DEPARTED SHOP	TIME IN	TIME OUT	RETURNED SHOP	TOTAL HOURS
AM / PM	800 AM / PM	430 AM / PM	AM / PM	

AUTHORIZATION FOR FIRE ALARM INTERRUPTION
The undersigned has been advised by Fire Service Inc. representative that it may be necessary to interrupt the fire protection service by disconnecting the system and/or a component in the performance of their assigned work.
The undersigned hereby assumes the responsibility for the notification of the authorities at the time the interruption is initiated and will take all of the precautions deemed necessary during this period of interruption and hold harmless Fire Service Inc. and its employees regarding interruption of fire protection service during their service of the equipment.

NAME _____ DATE _____ TIME _____

MATERIAL RECORD

QUANTITY	DESCRIPTION	COST
	PREVENTIVE MAINTENANCE CONTRACT	

CUSTOMER NAME (PRINT): SILVERSTEIN
CUSTOMER SIGNATURE: [signature]
SERVICEMAN SIGNATURE: [signature]

SERVICE PERFORMED & REMAINING: S/CONTRACT.

PREV. MAINTENANCE CHECK OF TTB'S (WALK RISER) & STROBE PNL'S ON FLOOR'S 38/33 AS LISTED LOCATIONS. —
NOTE: BATTERIES/LOW VOLTAGE. NEEDED ON 38/37/36/35/33 FLOOR'S (See Above)

(A) INACCESSIBLE (B) MISSING (C) DEFECTIVE (D) OTHER

to be Continued. —

FIRE SERVICE INCORPORATED

: 22335

Subsidiary of Firecom, Inc.
39-27 Fifty Ninth Street
Woodside, New York 11377
(718) 899-2311

REPORT OF FIELD SERVICE

LOCATIONS		DEVICES				
FLOOR		TTB's		STRBRM		TST MAINT
44	FREIGHT ELEV. 'B' EQUIP		(1)	AFC100		✓
43	FREIGHT AREA 'B' COMM	TTB 29A/B D3/4	(1)	PAD2 (SPARE)	(1)	✓ ✓
42	OPPOSITE RELIGTN. CLOSET WALL	TTB D1/2	(1)			✓
	FREIGHT AREA 'B' COMM.	TTB D3/4 28A/B	(1)	PAD2 (SPARE)	(1)	✓ ✓
41	FREIGHT AREA 'B' COMM.		(1)	PAD2 (SPARE)		✓
40	FREIGHT AREA 'B' COMM.	TTB 27A/B	(1) D3/4	PAD2 (SPARE)	(1)	✓
39	FREIGHT AREA 'B' COMM.	[redacted]		AFC100 PAD2 (100)	(1)	✓
39	OPP. AUDITH ENT. (WALL CLOSET)	TTB	(1) D1/2			✓

INVOICE TO: TW.TC. N.Y.C.

J. CARRIGAN

SERVICEMAN ASSIGNED: J. TORRES, F. ROSARIO	SEE AT JOB SITE: F.S.I
	DATE SCHEDULED: 6-20-00
CONTRACT #: 5/C00 818	TYPE OF SYSTEM: 850 D
FEE SERVICE #	P.O. #
CALL AUHTORIZED BY	PHONE / EXT

☒ MAINTENANCE ☐ TEST

☐ JOB COMPLETE ☐ JOB INCOMPLETE

☐ SYSTEM ON LINE ☐ SYSTEM OFF LINE

DEPARTED SHOP	TIME IN	TIME OUT	RETURNED SHOP	TOTAL HOURS
AM PM	810 AM PM	430 AM PM	AM PM	

MATERIAL RECORD

QUANTITY	DESCRIPTION	COST
	PREVENTIVE MAINTENANCE CONTRACT	

CUSTOMER NAME (PRINT): SILVERSTEIN

CUSTOMER SIGNATURE: J. Carrigan

SERVICEMAN SIGNATURE: [signature]

AUTHORIZATION FOR FIRE ALARM INTERRUPTION
The undersigned has been advised by Fire Service Inc. representative that it may be necessary to interrupt the fire protection service by disconnecting the system and/or a component in the performance of their assigned work.
The undersigned hereby assumes the responsibility for the notification of the authorities at the time the interruption is initiated and will take all of the precautions deemed necessary during the period of interruption and hold harmless Fire Service Inc. and its employees regarding interruption of the protection service during this service of the equipment.

NAME _____ DATE _____ TIME _____

SERVICE PERFORMED & REMAINING: 5/CONTRACT.

A PREVENTATIVE MAINTENANCE CHECK FOR OPERATING VOLTAGES, LOADS, WIRING ON TTB'S, RISER & STROBES PANELS AS LISTED (ABOVE) — UNITS ALSO WERE DUSTED OFF / CLEANED. — OLD WIRE (DEVICES) PULLOUT CASSETTES. — TO BE CONTINUED. —

(A) INACCESSIBLE (B) MISSING (C) DEFECTIVE (D) OTHER

FIRE SERVICE INCORPORATED

22339

Subsidiary of Firecom, Inc.
39-27 Fifty Ninth Street
Woodside, New York 11377
(718) 899-2311

REPORT OF FIELD SERVICE

LOCATIONS	DEVICES
FLOOR	
48 Plant Her	Strobe Panel Check OK (Key Cabinet Needed)
47 W. Her.	TTB Data 3-4 #31A-31B
47 A Tele's (Steps)	TTB Data 1-2 #19A-19B (Ensight - Strobe Pwr AFC 100)
46 B Coll. (Freight)	Strobe Pwr AFC 100 (1) Unit out to Repair - Key Cabinet Broken.
45 B Comm (Freight)	TTB D3-4 #30A-30B Strobe Pwr PID 2(1)
	TTB D1-2 (Wall Closet) #18A-18B AFC 100(1) AFC 100(1)
45 Freight Accuboy (Previously Reported)	S/D. Replaced Functional Unit 2 Back in Operation —

PREVENTIVE MAINTENANCE CONTRACT

INVOICE TO: D.W.T.C
N.Y.C.

SERVICEMAN ASSIGNED: J. Torres / F. Rosario	SEE AT JOB SITE: F.S.I.
	DATE SCHEDULED: 6-14-00
CONTRACT #: SFC00818	TYPE OF SYSTEM: 3500
FEE SERVICE #	P.O #
CALL AUHTORIZED BY	PHONE / EXT
☑ MAINTENANCE	☐ TEST
☐ JOB COMPLETE	☐ JOB INCOMPLETE
☐ SYSTEM ON LINE	☐ SYSTEM OFF LINE

DEPARTED SHOP	TIME IN	TIME OUT	RETURNED SHOP	TOTAL HOURS
AM PM	800 AM PM	430 AM PM	AM PM	

MATERIAL RECORD

QUANTITY	DESCRIPTION	COST

CUSTOMER NAME (PRINT): Silverstein
CUSTOMER SIGNATURE:
SERVICEMAN SIGNATURE: J. Torres / F. Rosario

AUTHORIZATION FOR FIRE ALARM INTERRUPTION
The undersigned has been advised by Fire Service Inc. representative that it may be necessary to interrupt the fire protection service by disconnecting the system and/or a component in the performance of the assigned work.
The undersigned hereby assumes the responsibility for the notification of the authorities at the time the interruption is initiated and will take all of the precautions deemed necessary during the period of interruption and hold harmless Fire Service Inc. and its employees regarding interruption of the protection service during this service of the equipment.

NAME _____ DATE _____ TIME _____

SERVICE PERFORMED & REMAINING: S/Contract. —

As per Contract Started Preventive Maint on TTB1 Took Reset From 48Fl. to 45 (See List) Above — Also Check Strobes Pull on Floors as Listed. — System Back Restored Back to Operation

(A) INACCESSIBLE (B) MISSING (C) DEFECTIVE (D) OTHER

FIRE SERVICE INCORPORATED

22338

Subsidiary of Firecom, Inc.
39-27 Fifty Ninth Street
Woodside, New York 11377
(718) 899-2311

REPORT OF FIELD SERVICE

LOCATIONS	DEVICES
FLOOR	
39	STROBE PNL TRBL - REPAIRS - (2) 12VOLT BATTERIES REPLACED. - AFC 100 CKT CHK O.K. -
31	STROBE PANEL TRBLE - REPAIRS (2) CKTS A-B - DISABLED DUE TO RENOVATION. - TO RESTORE. -
22	STROBE PNL TRBLE - SIGNAL TROUBLE REPAIRS - O.K. -
47	(3) STROBES LIGHTS S.W. CORNER CURTAIN WIRING CORRECTED & ALSO REPAIRED BROKEN P.C. TERMINAL ON STROBE UNIT. CHECK / TEST O.K. -

PREVENTIVE MAINTENANCE CONTRACT

INVOICE TO:
T.W.T.C.
N.Y.C.

SERVICEMAN ASSIGNED: J. TORRES / F. ROSARIO	SEE AT JOB SITE: F.S.I.
	DATE SCHEDULED: 6-13-00
CONTRACT #: S/C N 818	TYPE OF SYSTEM: 8500
FEE SERVICE #	P.O #
CALL AUHTORIZED BY	PHONE / EXT

☒ MAINTENANCE ☒ TEST
☐ JOB COMPLETE ☐ JOB INCOMPLETE
☐ SYSTEM ON LINE ☐ SYSTEM OFF LINE

DEPARTED SHOP	TIME IN	TIME OUT	RETURNED SHOP	TOTAL HOURS
AM PM	8:00 AM PM	4:30 AM PM	AM PM	

MATERIAL RECORD

QUANTITY	DESCRIPTION	COST
2	BATTERIES 12VLT.	

CUSTOMER NAME (PRINT): SILVERSTEIN
CUSTOMER SIGNATURE:
SERVICEMAN SIGNATURE:

AUTHORIZATION FOR FIRE ALARM INTERRUPTION
The undersigned has been advised by Fire Service Inc. representatives that it may be necessary to interrupt the fire protection service by disconnecting the system and/or a component in the performance of their assigned work.
The undersigned hereby assumes the responsibility for the notification of the authorities at the time the interruption is initiated and will take all of the precautions deemed necessary during this period of interruption and hold harmless Fire Service Inc. and its employees regarding interruption of the protection service during their service of the equipment.

TIME
DATE
NAME
X

SERVICE PERFORMED & REMAINING: OPEN PANELS CHECK TEST REPAIRS ON STROBES UNITS / PANELS AS LISTED ABOVE. - 39TH. (2) BATTERIES REPLACED ALSO AT 2ND FLR. - ADVISED F.S.I. AS REQUESTED TEST CHECK DOOR RELEASE ON 24TH FL. - SYSTEM OK / RESETED BACK TO OPERATION

(A) INACCESSIBLE (B) MISSING (C) DEFECTIVE (D) OTHER

FIRE SERVICE INCORPORATED 76788

SUBSIDIARY OF FIRECOM INC.

39-27 FIFTY NINTH STREET
WOODSIDE, NEW YORK 11377
(718) 899-2311

REPORT OF FIELD SERVICE

INVOICE TO

SERVICED
7 W.T.C
N.Y.C.

CALL AUTHORIZED BY	CONTRACT #	FEE SERVICE #	FJ #	P O #	SEE AT JOB SITE
RT	S/C 00 818				F.S.I

PHONE	EXT	DATE SCHEDULED	TIME SCHEDULED	SERVICEMAN ASSIGNED
		6-7-00	AM	L. FOLEY. E. ROSARIO D. PARRIS

MATERIAL RECORD

QUANTITY ISSUED	QUANTITY B/O	FCI NO	DESCRIPTION	UNIT PRICE	PER	TOTAL AMOUNT
1			HANUAL pll STATION HIRTONE	$40.00		
			— CAT # 47092-0260 —			

PREVENTIVE MAINTENANCE CONTRACT

CHECK APPROPRIATE BOX

- ☐ Q.C
- ☐ I & T
- ☐ FEE CALL
- ☐ DELIVERY
- ☐ DEMO
- ☐ EMERGENCY CALL
- ☒ CONTRACT CALL
- ☐ PICK UP
- ☐ DEMO OWNER
- ☐ SURVEY

DEPARTED SHOP	TIME IN	TIME OUT	RETURNED SHOP	TOTAL HOURS	START MILEAGE	END MILEAGE	MISC EXPENSE	CAR FARE
	800	430						

☐ MAT REQD ☐ PARTIAL
☐ OTHER ☐ LABOR REQD

SERVICE DATE 6-7-00

WILL RETURN ON

I & T COMPLETE ☐ CALL COMPLETE ☐

CUSTOMER SIGNATURE

SERVICEMAN SIGNATURE

AUTHORIZATION FOR FIRE ALARM INTERRUPTION

The undersigned has been advised by Fire Service Inc. representatives that it may be necessary to interrupt the fire protection service by disconnecting the system and/or a component in the performance of their assigned work.

The undersigned hereby assumes the responsibility for the notification of the authorities at the time the interruption is initiated and will take all of the precautions deemed necessary during the period of interruption and hold harmless Fire Service Inc. and its employees regarding interruption of the protection service during their service of the equipment.

Date

X

Name

PROBLEM—AS DESCRIBED · S/ CONTRACT / PREV MAINTENANCE · — Mokal Hawkins

SERVICE PERFORMED OS PER CONTRACT CHECK / ANY Repairs done on 37TH FL. Warden's Station — Cord s/b Replaced - Assy is O.K. — 36TH FL. MANUAL PULL STATION 058 - A' STATION Replaced Installed new one (old) DEFECTIVE). — CHECK O.K. — 47TH FL ROOF PLANT Replaced Exchanged AFC 100 PANEL STROBE PNL (DEFECTIVE w/Strobe) Installed Wired Tested O.K - Back in operation. — STROBE PANEL MODIFICATION UPDATE PERFORMED BY FIRECOM Eng. Dept. — 31ST FL PAGE / SPEAKER Trouble Condition due TO OPEN CKT / Faulty. Electrician Foreman Dept working on it. — Floor Under Construction — Safety OK / RESET Back to operation

WORK REMAINING

FCI 155
REV 6186

FIRE SERVICE INCORPORATED

76794

SUBSIDIARY OF FIRE[illegible]OM INC.
39-27 FIFTY NINTH STREET
WOODSIDE, NEW YORK 11377
(718) 899-2311

REPORT OF FIELD SERVICE

INVOICE TO

SERVICED
7 W.T.C.
N.Y.C.

CALL AUTHORIZED BY	CONTRACT #	FEE SERVICE #	F.J.#	P.O. #	SEE AT JOB SITE
R.T.	S/C 00-818				F.S.D.

PHONE	EXT	DATE SCHEDULED	TIME SCHEDULED	SERVICEMAN ASSIGNED
		6-6-00	A.M. —	J. TORRES F. ROSARIO

MATERIAL RECORD

QUANTITY ISSUED	QUANTITY B/O	FCI NO	DESCRIPTION	UNIT PRICE	PER	TOTAL AMOUNT
			PREVENTIVE MAINTENANCE CONTRACT			

CHECK APPROPRIATE BOX

- ☐ O.C
- ☐ I & T
- ☐ FEE CALL
- ☐ DELIVERY
- ☐ DEMO
- ☐ EMERGENCY CALL
- ☒ CONTRACT CALL
- ☐ PICK UP
- ☐ DEMO OWNER
- ☐ SURVEY

DEPARTED SHOP	TIME IN	TIME OUT	RETURNED SHOP	TOTAL HOURS	START MILEAGE	END MILEAGE	MISC EXPENSE	CAR FARE
	800	430						

- ☐ MAT RECD ☐ PARTIAL
- ☐ OTHER ☐ LABOR RECD

SERVICE DATE: 6-6-00

WILL RETURN ON:

I & T COMPLETE ☐ CALL COMPLETE ☐

CUSTOMER SIGNATURE:

SERVICEMAN SIGNATURE:

AUTHORIZATION FOR FIRE ALARM INTERRUPTION

The undersigned has been advised by Fire Service, Inc. representative that it may be necessary to interrupt the fire protection service by disconnecting the system and/or a component in the performance of their assigned work.

The undersigned hereby assumes the responsibility for the notification of the authorities at the time the interruption is initiated and will take all of the precautions deemed necessary during the period of interruption and hold harmless Fire Service Inc. and its employees regarding interruption of the protection service during their service of the equipment.

Date

X

Name

PROBLEM—AS DESCRIBED S/CONTRACT. — MAINTENANCE.

SERVICE PERFORMED (1) PER F.S.D. REQUESTED CHECK DOOR RELEASE ON 24TH FL. FREIGHT DOOR ENTRANCE NORTH (WOOD) - NOT WIRING EXISTING FOR CLASS'E' FIRE ALARM RELEASE FOR INTERCONNECTION. — AS WELL SOUTH PASS ELEV. LOBY ENTRY SOUTH DOOR (WOOD). - 'A' STAIR EXIT (SOLENOID) DEFECTIVE / SHALL TO BE REPLACED). - (BLD OPERATING). —

(2) ALSO AS PER CONTRACT CHECK STROBE UNITS ON 41ST FL. - 40TH FL. 39TH FL FOR PROPER OPERATION - EVERY O.K. - AS WELL 16TH FL AND 14TH FLOOR. -

(3) REPAIRS MADE ON WARDEN'S PHONE STATION 41ST FL. - CALL S/W KEYBOARD CONNECTION CHECK OK

WORK REMAINING (1) 45TH FL. ELEV. S/D 012 ON ALARM DUE TO 'CUTTING' MACHINE (TILES) INSTALLING BY ELEV. FREIGHT LOBY PAUSING S/D. ACTIVATION / UNIT READING BLD. NOTIFIED / F.S.D. —

FCI 155
REV 8186

FIRE SERVICE INCORPORATED

26065

Subsidiary of Firecom, Inc.
39-27 Fifty Ninth Street
Woodside, New York 11377
(718) 899-2311

REPORT OF FIELD SERVICE

LOCATIONS				DEVICES		
FLOOR				SPK/Page	W/STR	STROBES
32	Solomon Area			✓22	2	22
31	Solomon Area			✓25	2	25
30	Solomon Area			✓27	2	27
29	Solomon Area			✓22	2	22
28	Solomon Area			✓27	2	27
27	Solomon Area			✓29	2	29
26	Solomon Area			✓27	2	27
5	"		'	✓	5	
* 4	"		"	✓20	1	19*
* 3	Solomon Area			✓	—	-(2) 9*
2	"		"	✓	—	4
1	"		"	✓	—	1
48	Roof/Plant			✓	✓	✓
* 47	Solomon Area			✓	✓	✓-(3)*
						66
				STROBES LIGHTS TO BE REPLACED		N/C

PREVENTIVE MAINTENANCE CONTRACT

INVOICE TO: 7 W.T.C
H.Y.C

SERVICEMAN ASSIGNED: A. TORRES / F. ROSARIO	SEE AT JOB SITE: FSA
	DATE SCHEDULED: 6-3-00
CONTRACT #: 5/C00 818	TYPE OF SYSTEM: 8500
FEE SERVICE #: -	P O #:
CALL AUHTORIZED BY	PHONE / EXT
☒ MAINTENANCE	☐ TEST
☐ JOB COMPLETE	☐ JOB INCOMPLETE
☐ SYSTEM ON LINE	☐ SYSTEM OFF LINE

DEPARTED SHOP	TIME IN	TIME OUT	RETURNED SHOP	TOTAL HOURS
AM PM	8 AM PM	4:30 AM PM	AM PM	

MATERIAL RECORD

QUANTITY	DESCRIPTION	COST
*		

CUSTOMER NAME (PRINT): [illegible]
CUSTOMER SIGNATURE:
SERVICEMAN SIGNATURE: [signature]

AUTHORIZATION FOR FIRE ALARM INTERRUPTION
The undersigned has been advised by Fire Service Inc. representatives that it may be necessary to interrupt the fire protection service by disconnecting the system and/or a component as the performance of their assigned work.
The undersigned hereby assumes the responsibility for the notification of the authorities at the time the interruption is initiated and will take all of the precautions deemed necessary during this period of interruption and hold harmless Fire Service Inc. and its employees regarding interruption of fire protection service during their service of the equipment.

NAME _____ DATE _____ TIME _____

SERVICE PERFORMED & REMAINING: Typical Contract Annual Maintenance Visit For Proper Operation Activation of Speakers Rapid/Page - Communications Wireless Phone + STROBES Lights in Floors Listed Above (Solomon Area). — Also Reset 48th + 47th Floor's Page Speakers / Substations due to previous

(A) INACCESSIBLE (B) MISSING (C) DEFECTIVE (D) OTHER

Malfunctions - NOTE: 4th Fl. Strobe's 1/2 CKT Active Need's to be Troubleshooted - 3rd Fl. (2) Lights

FIRE SERVICE INCORPORATED 76786

SUBSIDIARY OF FIRECOM INC.

39-27 FIFTY NINTH STREET
WOODSIDE, NEW YORK 11377
(718) 899-2311

REPORT OF FIELD SERVICE

INVOICE TO

SERVICED

-/W.T.C
N.Y.C.

CALL AUTHORIZED BY	CONTRACT #	FEE SERVICE #	FJ #	P O #	SEE AT JOB SITE
C.I.	S/C00818				F.S.I.

PHONE	EXT	DATE SCHEDULED	TIME SCHEDULED	SERVICEMAN ASSIGNED
		5-31-00	A.M.	V. Tower. T. Rosario

MATERIAL RECORD

QUANTITY ISSUED	QUANTITY B/O	F C I NO	DESCRIPTION	UNIT PRICE	PER	TOTAL AMOUNT
			PREVENTIVE MAINTENANCE CONTRACT			

CHECK APPROPRIATE BOX

- ☐ Q.C
- ☐ I & T
- ☐ FEE CALL
- ☐ DELIVERY
- ☐ DEMO
- ☐ EMERGENCY CALL
- ☒ CONTRACT CALL
- ☐ PICK UP
- ☐ DEMO OWNER
- ☐ SURVEY

DEPARTED SHOP	TIME IN	TIME OUT	RETURNED SHOP	TOTAL HOURS	START MILEAGE	END MILEAGE	MISC EXPENSE	CAR FARE
	800	430						

- ☐ MAT REQD ☐ PARTIAL
- ☐ OTHER ☐ LABOR REQD

SERVICE DATE: 5-31-00

WILL RETURN ON:

I&T COMPLETE ☐ CALL COMPLETE ☐

CUSTOMER SIGNATURE:

SERVICEMAN SIGNATURE:

AUTHORIZATION FOR FIRE ALARM INTERRUPTION

The undersigned has been advised by Fire Service, Inc. representative that it may be necessary to interrupt the fire protection service by disconnecting the system and/or a component in the performance of their assigned work.

The undersigned hereby assumes the responsibility for the notification of the authorities at the time the interruption is initiated and will take all of the precautions deemed necessary during the period of interruption and hold harmless Fire Service Inc. and its employees regarding interruption of fire protection service during their service of the equipment

Date

Name

PROBLEM—AS DESCRIBED SERVICE CONTRACT / PREV. MAINTENANCE / REMOTE. —

SERVICE PERFORMED 14TH FL. STROBE PANEL Trouble 'A' CKT. - Three Found Unit STROBE Light OPEN WIRING North Corridor. - Repaired / Tested Back to NORMAL. - 16TH FL. STROBE PANEL (MER) Repaired. - P.O. - Modified UP DATED — due to FALSE Trouble Initiated TEST. - 'A' & 'B' CKT'S Restored Back to NORMAL. — TEST O.K. - 41ST FL. STROBE PANEL PAD-2 Trouble due to Battery over Charge / to be Replaced For Future. Also As per F.S.I. Requested Check For DOOR Before Activation on Second Floor on 3RD / 14TH / 27TH / 29 O.K. —

WORK REMAINING 41ST STROBE PANEL Replace Batteries. —

FCI 155
REV 8186

FIRE SERVICE INCORPORATED 76787

SUBSIDIARY OF FIRECOM INC.
39-27 FIFTY NINTH STREET
WOODSIDE, NEW YORK 11377
(718) 899-2311

REPORT OF FIELD SERVICE

INVOICE TO

SERVICED
7 W.T.C
N.Y.C.

CALL AUTHORIZED BY		CONTRACT #	FEE SERVICE #	FJ #	P O #	SEE AT JOB SITE
R.J.		S/C 00 818				F.J.O.
PHONE	**EXT**	**DATE SCHEDULED**	**TIME SCHEDULED**			**SERVICEMAN ASSIGNED**
		5-30-00	AM			J. Torres / F. Rosario

MATERIAL RECORD

QUANTITY ISSUED	QUANTITY B/O	F C I NO	DESCRIPTION	UNIT PRICE	PER	TOTAL AMOUNT
			PREVENTIVE MAINTENANCE CONTRACT			

CHECK APPROPRIATE BOX

- ☐ Q.C
- ☐ I & T
- ☐ FEE CALL
- ☐ DELIVERY
- ☐ DEMO
- ☐ EMERGENCY CALL
- ☒ CONTRACT CALL
- ☐ PICK UP
- ☐ DEMO OWNER
- ☐ SURVEY

DEPARTED SHOP	TIME IN	TIME OUT	RETURNED SHOP	TOTAL HOURS	START MILEAGE	END MILEAGE	MISC EXPENSE	CAR FARE
	800	4:30						

- ☐ MAT REQD
- ☐ PARTIAL
- ☐ OTHER
- ☐ LABOR REQD

SERVICE DATE: 5-30-00

WILL RETURN ON:

I & T COMPLETE ☐ CALL COMPLETE ☐

CUSTOMER SIGNATURE

SERVICEMAN SIGNATURE

AUTHORIZATION FOR FIRE ALARM INTERRUPTION

The undersigned has been advised by Fire Service, Inc. representative that it may be necessary to interrupt the fire protection service by disconnecting the system and/or a component in the performance of their assigned work.
The undersigned hereby assumes the responsibility for the notification of the authorities at the time the interruption is initiated and will take all of the precautions deemed necessary during the period of interruption and hold harmless Fire Service Inc. and its employee regarding interruption of fire protection service during their service of the equipment.

X Date

Name

PROBLEM—AS DESCRIBED S/CONTRACT REPAIRS. — PREV. MAINTENANCE. —

SERVICE PERFORMED AFC 100
45TH FL. STROBE PKL ~~FEED~~ ~~FEED~~ FOUND B LOOP - SHORTED TO BE TRACED STROBES LIGHT / ZONE BYPASSED E.O.L. - TEMPORARILY. — H/A ACCS. - 41ST FL. REPLACED INSTALLED (2) NEW 12 VOLTS. BATTERIES PAID 21 PANELS (OLD HAS DRY OUT). — TROUBLE/ALARM BACK TO NORMAL. —
47TH FL. CHECK TTB'S DATE 2 — FOR W/STATIONS & FLOOR PAGE INOPERABLE. — REPLACED MOTHER BOARD / 792 P.C. — FOR OUTPUTS VOLTAGES. — WARDEN'S STATION REPLACED CHECK O.K. — FLOOR PAGE CHECK O.K. —
48TH FL. ROOF PLANT REPAIRED W/STATIONS / P.A. PAGE. CHECK/TEST O.K. —

WORK REMAINING CONTINUE I/C. REPAIRS. —

FCI 155
REV 6198

FIRE SERVICE INCORPORATED

22337

Subsidiary of Firecom, Inc.
39-27 Fifty Ninth Street
Woodside, New York 11377
(718) 899-2311

REPORT OF FIELD SERVICE

LOCATIONS			DEVICES			
FLOOR			TMPR		RESET	CHK
47	'B' Riser		155		OK	✓
46			154		OK	✓
45			147		closed	✓
44	'B' Riser		146		OK	✓
44			146		OK	✓
44			142		OK	✓
43			140		closed	✓
42	'B' Riser		139		closed	✓
41			133		OK	✓
40			137		OK	✓
39			136		OK	✓
38			135		OK	✓
37			134		OK	✓
36			132		OK	✓
35	'B' Riser		132		OK	✓
34			131		OK	✓
33			130		OK	✓
32			129		closed	✓
31			128		closed	✓
30			127		closed	✓
29	'B' Riser		126		OK	✓
28			125		OK	✓
27			124		OK	✓
26			123		OK	✓
7			130		OK	✓
6			129		OK	✓
5			128		OK	✓
3	'B' Riser		126		OK	✓
3			125		OK	✓
2			123		OK	✓
2			123		OK	✓
1			123		OK	✓

INVOICE TO: W.T.C

N.Y.C.

SERVICEMAN ASSIGNED: J. Torres / F. Tosmeio	SEE AT JOB SITE: F-J-1
	DATE SCHEDULED: 5-24-00
CONTRACT #: S/C00818	TYPE OF SYSTEM: 850
FEE SERVICE #	P.O. #
CALL AUHTORIZED BY	PHONE / EXT

☒ MAINTENANCE ☒ TEST
☒ JOB COMPLETE ☐ JOB INCOMPLETE
☐ SYSTEM ON LINE ☐ SYSTEM OFF LINE

DEPARTED SHOP	TIME IN	TIME OUT	RETURNED SHOP	TOTAL HOURS
AM PM	8:30 (AM PM)	4:30 (AM PM)	AM PM	

MATERIAL RECORD

QUANTITY	DESCRIPTION	COST
	PREVENTIVE MAINTENANCE CONTRACT	

CUSTOMER NAME (PRINT): Silverstein

CUSTOMER SIGNATURE

SERVICEMAN SIGNATURE

AUTHORIZATION FOR FIRE ALARM INTERRUPTION
The undersigned has been advised by Fire Service Inc. representative that it may be necessary to interrupt the fire protection service by disconnecting the system and/or a component in the performance of their assigned work.
The undersigned hereby assumes the responsibility for the notification of the authorities at the time the interruption is initiated and will take all of the precautions deemed necessary during the period of interruption and hold harmless Fire Service Inc. and its employees regarding interruption of fire protection service during their service of the equipment.

NAME DATE TIME

SERVICE PERFORMED & REMAINING

C.I. per F.J.1 Request / Blg Retested. Check Resets on Talkers
S/W on 'B' Riser As Listed - (Pins out previously). -
System Cycle / Inspected as Required. -

(A) INACCESSIBLE (B) MISSING (C) DEFECTIVE (D) OTHER

FIRE SERVICE INCORPORATED

22336

Subsidiary of Firecom, Inc.
39-27 Fifty Ninth Street
Woodside, New York 11377
(718) 899-2311

REPORT OF FIELD SERVICE

LOCATIONS			DEVICES			
FLOOR	'B' Riser		TYPE		RESET	CHK
25			122		OK	✓
24			121		OK	✓
23			120		OK	✓
22			150		OK	✓
21	'B' Riser		149		OK	✓
21	(B/Rm)		149		OK	✓
20			146		OK	✓
20			145		OK	✓
20			144		OK	✓
20			143		OK	✓
19			142		OK	✓
			(ADJD)			
18	'B' Riser		141		OK	✓
17			140		O.K	✓
16			139		OK	✓
15			138		OK	✓
14			137		OK	✓
			(ADJD)			
13	'B' Riser		136		OK	✓
12			135		OK	✓
11			134		OK	✓
10			133		OK	✓
9	'B' Riser		132		OK	✓
8			131		O.K	✓
39	STROBE PNL (UPDATED/MODIFIED) AFL 100				OK	
	Back in operation.					

INVOICE TO: W.T.C
N.Y.C.

SERVICEMAN ASSIGNED: J. Torres / T. Poinelli	SEE AT JOB SITE: F.S.I
	DATE SCHEDULED: 5-23-00
CONTRACT #: S/C00818	TYPE OF SYSTEM: 8700
FEE SERVICE #	P.O. #
CALL AUHTORIZED BY	PHONE / EXT

☐ MAINTENANCE ☒ TEST
☐ JOB COMPLETE ☐ JOB INCOMPLETE
☐ SYSTEM ON LINE ☐ SYSTEM OFF LINE

DEPARTED SHOP	TIME IN	TIME OUT	RETURNED SHOP	TOTAL HOURS
AM PM	800 AM PM	430 AM PM	AM PM	

MATERIAL RECORD

QUANTITY	DESCRIPTION	COST
	PREVENTIVE MAINTENANCE CONTRACT	

CUSTOMER NAME (PRINT): Sean O'Keeffe.
CUSTOMER SIGNATURE:
SERVICEMAN SIGNATURE: J. Torres / T. Poinelli

AUTHORIZATION FOR FIRE ALARM INTERRUPTION
The undersigned has been advised by Fire Service Inc. representative that it may be necessary to interrupt the fire protection service by disconnecting the system and/or a component in the performance of their assigned work.
The undersigned hereby assumes the responsibility for the notification of the authorities at the time the interruption is initiated and will take all of the precautions deemed necessary during this period of interruption and hold harmless Fire Service Inc. and its employees regarding interruption of the protection service during their service of the equipment.

NAME DATE TIME

SERVICE PERFORMED & REMAINING

As per F.S.I Requested - as prev. Maintenance Check For Alarm / Dly Reset 38th Floor 'B' Tamper S/s on Standpipe 'B' Riser (List Printout Reports). —
Also: Replaced Strobe Pnl 39th Fl (Modification Units) Check ok. —

(A) INACCESSIBLE (B) MISSING (C) DEFECTIVE (D) OTHER

Back in operation

FIRE SERVICE INCORPORATED

22334

Subsidiary of Firecom, Inc.
39-27 Fifty Ninth Street
Woodside, New York 11377
(718) 899-2311

REPORT OF FIELD SERVICE

LOCATIONS | **DEVICES**

FLOOR	Areas		W/STA	SR/STD		P.A.
38	Solomon Both		2	18		OK
37	Solomon Smith		2	21		OK
36	Solomon Smith	'A' 'B' EXIT MANUAL PULL STA to Replace. - S/W BROKEN. -	2	22		OK
35	Solomon Smith B.		2	14		O.K
34	Solomon Smith B.		2	20		OK
33	Solomon Smith B.		2	23		OK.
	(1) S/Stroke Unit	(Light N/G) TO Replace	FRONT OF WHEEL -			

PREVENTIVE MAINTENANCE CONTRACT

INVOICE TO:
TWTC
Solomon Smith Barney
N.Y.C.

SERVICEMAN ASSIGNED: J. Torres / F. Rosario	SEE AT JOB SITE: F.S.I
	DATE SCHEDULED: 5-20-00
CONTRACT #: c/c 00 818	TYPE OF SYSTEM: 8500
FEE SERVICE #	P.O #
CALL AUHTORIZED BY	PHONE / EXT

☐ MAINTENANCE ☐ TEST
☐ JOB COMPLETE ☐ JOB INCOMPLETE
☐ SYSTEM ON LINE ☐ SYSTEM OFF LINE

DEPARTED SHOP	TIME IN	TIME OUT	RETURNED SHOP	TOTAL HOURS
AM PM	11:30 AM PM	4:30 AM PM	AM PM	

AUTHORIZATION FOR FIRE ALARM INTERRUPTION
The undersigned has been advised by Fire Service Inc. representative that it may be necessary to interrupt the fire protection service by disconnecting the system and/or a component in the performance of their assigned work.
The undersigned hereby assumes the responsibility for the notification of the authorities of the time the interruption is [illegible] and will take all of the precautions deemed necessary during the period of interruption and hold harmless Fire Service Inc. and its employees regarding interruption of fire protection service during their service of the equipment.

NAME / DATE / TIME

MATERIAL RECORD

QUANTITY	DESCRIPTION	COST

CUSTOMER NAME (PRINT)
CUSTOMER SIGNATURE
SERVICEMAN SIGNATURE

SERVICE PERFORMED & REMAINING: As per Contract Carried Testing Activities of Audio Page Speaker Fire Strobes Lights on Solomon Smith Barney Floors as Listed Above. — Communications Warden's Phone Stations. — Units Available For Test. —

(A) INACCESSIBLE (B) MISSING (C) DEFECTIVE (D) OTHER

FIRE SERVICE INCORPORATED

22333

Subsidiary of Firecom, Inc.
39-27 Fifty Ninth Street
Woodside, New York 11377
(718) 899-2311

REPORT OF FIELD SERVICE

LOCATIONS | **DEVICES**

FLOOR				CABLE	ADDR	S/D	TST CLEAN
3rd	ELECT	A		1	166	BLK	
	ELECT	B		1	166	D13	
	TELEP	B		1	166	BLK	
	COMM	A		1	166	BLK	
	COMM	B		1	166	BLK	
	FIELD	ELEV		01	002	BLK	
	[illegible]						
	SECURITY	CLOSET		3	048	IEL3	
	KITCHEN	SUPPLY		3	042	EDW5	✓
	WEST	MEN	AREA	3	006	PEC3T	✓
	WEST	MEN	AREA	3	006	PEC3T	✓
	WEST	MEN	D/D	3	040	EDW5	✓
	WEST	MEN	D/D	3	041	EDW5	✓
	WEST	MEN	D/D SUPPLY	3	040	EDW5	✓
	WEST	MEN	D/D RET.	3	040	EDW5	✓
3rd	RECEPTION	AREA		1	077	D13	✓
	AREA	S/D		1	077	D13	✓
	ELEV.	S/D	LOBBY	3	029	PEC3	✓
2nd	E.H.R.			3	005	PEC3T	✓
2nd	ELEV.	LOBBY		3	028	PEC3	✓
1st	M.E.R.	D/D		3	039	EDW4	✓
1	MER	AREA		1	012	PEC3T	✓
1	MER	D/D		3	037	EDW5	✓

PREVENTIVE MAINTENANCE CONTRACT

INVOICE TO: T.W.T.C.
N.Y.C.

SERVICEMAN ASSIGNED: J. TORRES / F. ROSARIO	SEE AT JOB SITE: I.J.O
	DATE SCHEDULED: 5-17-00
CONTRACT #: S/C 00 818	TYPE OF SYSTEM: 8
FEE SERVICE #	P.O. #
CALL AUHTORIZED BY	PHONE / EXT

☒ MAINTENANCE ☐ TEST
☐ JOB COMPLETE ☐ JOB INCOMPLETE
☐ SYSTEM ON LINE ☐ SYSTEM OFF LINE

DEPARTED SHOP	TIME IN	TIME OUT	RETURNED SHOP	TOTAL HOURS
AM/PM	810 AM/PM	430 AM/PM	AM/PM	

MATERIAL RECORD

QUANTITY	DESCRIPTION	COST

CUSTOMER NAME (PRINT): SILVERSTEIN
CUSTOMER SIGNATURE
SERVICEMAN SIGNATURE

AUTHORIZATION FOR FIRE ALARM INTERRUPTION
The undersigned has been advised by Fire Service Inc. representative that it may be necessary to interrupt the fire protection service by disconnecting the system and/or a component in the performance of the assigned work.
The undersigned hereby assumes the responsibility for the notification of the authorities at the time the interruption is initiated and will take all of the precautions deemed necessary during the period of interruption and hold harmless Fire Service Inc. and its employees regarding interruption of the protection service during this service of the equipment.

NAME _____ DATE _____ TIME _____

SERVICE PERFORMED & REMAINING: S/Contract Continue Perf. Maintenance on Smoke Detectors Units Floors 3rd/2nd/1st As Directed Above (Johnson Smith Bonnie only.) System OK / Service Complete / Back to Operation

(A) INACCESSIBLE (B) MISSING (C) DEFECTIVE (D) OTHER

FIRE SERVICE INCORPORATED

: 22332

Subsidiary of Firecom, Inc.
39-27 Fifty Ninth Street
Woodside, New York 11377
(718) 899-2311

REPORT OF FIELD SERVICE

LOCATIONS | **DEVICES**

FLOOR	AREA/ZONE	CABLE	X/TNDR	S/D	TST/CLEAN
5	ELEC A	1	169	BLK	✓
	ELEC B	1	169	BLK	✓
	ELEC C	1	169	BLK	✓
	ELEC F	1	169	BLK	✓
	TELEPH A	1	169	BLK	✓
	TELEPH B	1	169	BLK	✓
	COMM B	1	169	BLK	✓
	FREIGHT ELEV	1	004	BLK	✓
	MAIN PASS ELEV	1	004	BLK	✓
	ROTO CLOSE	3	013	PEC3T	✓
5	ROTO CLOSE	3	013	PEC3T	✓
4	ELEC A	1	167	BLK	✓
	ELEC G	3	050	PEC3	✓
	TELEPH B	1	167	BLK	✓
	COMM B	1	167	BLK	✓
	FREIGHT ELEV.	1	003	BLK	✓
	PASS ELEV.	1	003	BLK	✓
	CHEF OFFICE	3	043	EQUAL	✓
	ELEC B	1	167	BLK	✓
4	TELEPH A	1	167	BLK	✓
44	SHUTTLE ELEV	4	018	PEC3	*
	MULTIPLE ALARMS (SEE UNIT Symbol)				
	BACK IN OPERATION. -				

PREVENTIVE MAINTENANCE CONTRACT

INVOICE TO: 7 W.T.C
N.Y.C.

SERVICEMAN ASSIGNED	SEE AT JOB SITE
J. TORRES	FJ
F. ROSARIO	DATE SCHEDULED 5/16-00
CONTRACT # SE 00 818	TYPE OF SYSTEM 8500
FEE SERVICE #	P.O. #
CALL AUHTORIZED BY	PHONE / EXT

☑ MAINTENANCE ☐ TEST
☐ JOB COMPLETE ☐ JOB INCOMPLETE
☐ SYSTEM ON LINE ☐ SYSTEM OFF LINE

DEPARTED SHOP	TIME IN	TIME OUT	RETURNED SHOP	TOTAL HOURS
AM PM	800 AM PM	430 AM PM	AM PM	

MATERIAL RECORD

QUANTITY	DESCRIPTION	COST

CUSTOMER NAME (PRINT) SILVERSTEIN
CUSTOMER SIGNATURE
SERVICEMAN SIGNATURE

AUTHORIZATION FOR FIRE ALARM INTERRUPTION
The undersigned has been advised by Fire Service Inc. representative that it may be necessary to interrupt the fire protection service by disconnecting the system and/or a component in the performance of their assigned work.
The undersigned hereby assumes the responsibility for the notification of the authorities at the time the interruption is initiated and will take all of the precautions deemed necessary during the period of interruption and hold harmless Fire Service Inc. and its employees regarding interruption of the protection service during their service of the equipment.

TIME / DATE / NAME

SERVICE PERFORMED & REMAINING S/Contract -

Preventive Maintenance on Smoke Detection on 5th / 4th. (Solomon Floor)
Co Listen Also Again on 4 th Smoke Detector Unit (4-018) Elect. Shaft
Elevator Unit Recall (Lobby) for Another Inspection Unit back in

(A) INACCESSIBLE Operation (B) MISSING (C) DEFECTIVE (D) OTHER

FIRE SERVICE INCORPORATED

91421
#1

SUBSIDIARY OF FIRECOM INC.
39-27 FIFTY NINTH STREET
WOODSIDE, NEW YORK 11377
(718) 899-2311

REPORT OF FIELD SERVICE

INVOICE TO

SERVICED
7WTC New York
N.Y

CALL AUTHORIZED BY	CONTRACT #	FEE SERVICE #	FJ #	PO #	SEE AT JOB SITE
SHOP	U.P.S = 818				A.S.P
PHONE / **EXT**	**DATE SCHEDULED**	**TIME SCHEDULED**			**SERVICEMAN ASSIGNED**
	5-16-00	AM			C. FORERO

MATERIAL RECORD

QUANTITY ISSUED	QUANTITY B/O	FCI NO	DESCRIPTION	UNIT PRICE	PER	TOTAL AMOUNT

PREVENTIVE MAINTENANCE CONTRACT

CHECK APPROPRIATE BOX

- ☐ Q.C
- ☐ I & T
- ☐ FEE CALL
- ☐ DELIVERY
- ☐ DEMO
- ☐ EMERGENCY CALL
- ☒ CONTRACT CALL
- ☐ PICK UP
- ☐ DEMO OWNER
- ☐ SURVEY

DEPARTED SHOP	TIME IN	TIME OUT	RETURNED SHOP	TOTAL HOURS	START MILEAGE	END MILEAGE	MISC EXPENSE	CAR FARE
	9.30	11.30						
	AM	PM						

- ☐ MAT REQD ☐ PARTIAL
- ☐ OTHER ☐ LABOR REQD

I & T COMPLETE ☐ CALL COMPLETE ☐

SERVICE DATE: 5-16-00

WILL RETURN ON:

CUSTOMER SIGNATURE: Brian O'Keeffe

SERVICEMAN SIGNATURE: CARLOS FORERO

AUTHORIZATION FOR FIRE ALARM INTERRUPTION

The undersigned has been advised by Fire Service Inc representative that it may be necessary to interrupt the fire protection service by disconnecting the system and/or a component in the performance of their assigned work.

The undersigned hereby assumes the responsibility for the notification of the authorities at the time the interruption is initiated and will take all of the precautions deemed necessary during the period of interruption and hold harmless Fire Service Inc and its employee regarding interruption of fire protection service during their service of the equipment

Date

X

Name

PROBLEM—AS DESCRIBED U.P.S MAINTENANCE / SERVICE CONTRACT

SERVICE PERFORMED Checked U.P.S System, Took Reading For Inputs - Outputs, Battery Voltage, U.P.S System Cont) Also Cleaned Filters

Battery Amp .2
Total Bakiy Voltage = 140.7 V (#30 Batteries)
Out - Put Hz 62.5 Hz
Load #1 11.1
L #2 11.1
Output Voltage 296.V A/C

WORK REMAINING

FCI 155
REV 6186

FIRE SERVICE INCORPORATED

91680

SUBSIDIARY OF FIRECOM INC.

39-27 FIFTY NINTH STREET
WOODSIDE, NEW YORK 11377
(718) 899-2311

REPORT OF FIELD SERVICE

INVOICE TO

SERVICED

7 WTC
New York City

CALL AUTHORIZED BY	CONTRACT #	FEE SERVICE #	F.J.#	P.O. #	SEE AT JOB SITE
Ricky Trivino	UPS SC 818				F.S.D

PHONE	EXT	DATE SCHEDULED	TIME SCHEDULED	SERVICEMAN ASSIGNED
		05/16/00		MARIO D

MATERIAL RECORD

QUANTITY ISSUED	QUANTITY B/O	F.C.I. NO.	DESCRIPTION	UNIT PRICE	PER	TOTAL AMOUNT
			PREVENTIVE MAINTENANCE CONTRACT			

CHECK APPROPRIATE BOX

- ☐ Q.C
- ☐ I & T
- ☐ FEE CALL
- ☐ DELIVERY
- ☐ DEMO
- ☐ EMERGENCY CALL
- ☐ CONTRACT CALL
- ☐ PICK UP
- ☐ DEMO OWNER
- ☐ SURVEY

DEPARTED SHOP	TIME IN	TIME OUT	RETURNED SHOP	TOTAL HOURS	START MILEAGE	END MILEAGE	MISC EXPENSE	CAR FARE
8:00 AM	9:30 AM	11:30 AM						

- ☐ MAT RECD
- ☐ PARTIAL
- ☐ OTHER
- ☐ LABOR RECD

SERVICE DATE

CUSTOMER SIGNATURE: Sean O'Keeffe

I & T COMPLETE ☐ CALL COMPLETE ☐

WILL RETURN ON

SERVICEMAN SIGNATURE: Mario Flowers

AUTHORIZATION FOR FIRE ALARM INTERRUPTION

The undersigned has been advised by Fire Service, Inc. representative that it may be necessary to interrupt the fire protection service by disconnecting the system and/or a component in the performance of their assigned work.

The undersigned hereby assumes the responsibility for the notification of the authorities at the time the interruption is initiated and will take all of the precautions deemed necessary during the period of interruption and hold harmless Fire Service Inc. and its employees regarding interruption of the protection service during their service of the equipment.

Date X

Name

PROBLEM—AS DESCRIBED

UPS Maintenance / Service contract

SERVICE PERFORMED

Cleaned and checked UPS system for connections, input and output voltages readings and Battery voltages. Battery voltage range is 13.5 Vdc (normal range)

Battery amp : 0.2 Amps
total battery voltage 140 Vdc
output Hz : 62.5 Hz

WORK REMAINING

Load 1 : 11.0 Amps
Load 2 : 11.0 Amps
output voltage 246 V AC

FCI 155
REV 6186

FIRE SERVICE INCORPORATED

22330

Subsidiary of Firecom, Inc.
39-27 Fifty Ninth Street
Woodside, New York 11377
(718) 899-2311

REPORT OF FIELD SERVICE

LOCATIONS			DEVICES			
FLOOR			W/STA	SP/STBES		P.A.
48	Solomon Smith B.		2	6		N/G.
47	"	"	2	17		N/G.
46	"	"	2	23		OK.
45	"	"	1	54		O.K
44	"	"	1	16		OK
43	"	"	1	OUT (UNDER CONST)		OUT
42	"	"	2	20		O.K
41	"	"	2	23		O.K.
40	"	"	2	22		OK
39	"	"	2	24		O.K.

TO BE CONTINUE

PREVENTIVE MAINTENANCE CONTRACT

INVOICE TO: T.W.T.C. SOLOMON SMITH BARNEY N.Y.C.

SERVICEMAN ASSIGNED: J. TORRES / F. ROSARIO	SEE AT JOB SITE: F.I.)
	DATE SCHEDULED: 5-13-00
CONTRACT #: S/C 00818	TYPE OF SYSTEM: 8500
FEE SERVICE #	P.O. # -
CALL AUHTORIZED BY	PHONE / EXT

☐ MAINTENANCE ☐ TEST
☐ JOB COMPLETE ☐ JOB INCOMPLETE
☐ SYSTEM ON LINE ☐ SYSTEM OFF LINE

DEPARTED SHOP	TIME IN	TIME OUT	RETURNED SHOP	TOTAL HOURS
AM PM	800 (AM) PM	430 AM (PM)	AM PM	

MATERIAL RECORD

QUANTITY	DESCRIPTION	COST

CUSTOMER NAME (PRINT): DOUGLAS MAZZONE
CUSTOMER SIGNATURE: Douglas Mazzone
SERVICEMAN SIGNATURE: Arthur Jr. Jack Rosario

AUTHORIZATION FOR FIRE ALARM INTERRUPTION
The undersigned has been advised by Fire Service Inc. representative that it may be necessary to interrupt the fire protection service by disconnecting the system and/or a component in the performance of their assigned work.
The undersigned hereby assumes the responsibility for the notification of the authorities at the time the interruption is initiated and will take all of the precautions deemed necessary during this period of interruption and hold harmless Fire Service Inc. and its employees regarding interruption of fire protection service during their service of the equipment.

NAME DATE TIME

SERVICE PERFORMED & REMAINING: S/CONTRACT - CHECK TESTED AUDIO/VISUAL ACTIVATION ON SPEAKER'S / STROBES LIGHTS BY GUARDING 4/STATIONED ON FLOOR'S 48 TO 39 AS LISTED. I ALSO TESTED COMMUNICATION DEVICES - WARDEN'S PHONES. -

NOTE: SPKR'S / STROBES FLOOR'S 48 (PLANT + 47TH) DEFECTIVE N/G - TO BE TROUBLESHOOTED - REPAIR AND/OR REPLACE ASAP. -

(A) INACCESSIBLE (B) MISSING (C) DEFECTIVE (D) OTHER

FIRE SERVICE INCORPORATED

21309

Subsidiary of Firecom, Inc.
39-27 Fifty Ninth Street
Woodside, New York 11377
(718) 899-2311

REPORT OF FIELD SERVICE

LOCATIONS | **DEVICES**

INVOICE TO: W.T.C / N.Y.C

FLOOR	AREA	IN -		CAP'L	ZONE	S/D	TST & CLEAN
35	ELECT	A-B	(2)	2	196	BLK	✓
	TELEPH	A-B	(2)	2	196	BLK	✓
	COMM	A-B	(2)	2	196	BLK	✓
	ELECT	C-D	(2)	4	049	EDWDS/BLK.	✓
	ELECT	F		4	049	BLK	✓
	ELECT	F1		4	049	PEC 3	✓
	ELECT	G		4	073	PEC 3	✓
	SECURITY			4	073	PEC 3	✓
	ELEV. PASS			2	012	BLK	✓
	FREIGHT ELEV			2	012	BLK	✓
	ELEV. SHUTTLE			4	001	PEC 3	✓
	W. MEZ. AREA			4	025	PEC 3T	✓
	W. MEZ. D/D.			4	097	EDWDS	✓
34	ELECT	A-B	(2)	2	194	BLK	✓
	ELECT	C-D	(2)	2	193	BLK	✓
	TELEPH	A-B	(2)	2	194	BLK	✓
	TELEPH	C-D	(2)	2	193	BLK	✓
	COMM	A-B	(2)	2	194	BLK	✓
	COMM	C		2	193	BLK	✓
	ELECT	DW		2	193	BLK	✓
	ELECT	F		4	048	PEC 3	✓
	ELECT	F1	A/E ROOM	4	048	PEC 3	✓
	ELECT	G		4	072	PEC 3	✓
	SECURITY			4	072	PEC 3	✓
	FREIGHT ELEV			2	011	BLK	✓
	ELEV. LOBBY			2	011	BLK	✓
	ELEV. SHUTTLE			4	000	PEC 3	✓
	CORE MEZ.	Area	(3)	91	252	PEC 3T	✓
	CORE MEZ. D/D.			2	251	HONEYWELL	✓
	CORE MEZ. D/D.			2	251	HONEYWELL	✓
	W. MEZ.	AREA		4	024	PEC 3T	✓
	W. MEZ.	D/D		4	096	EDWDS	✓
	KITCHEN	EXH.		4	121	EDWDS	✓

SERVICEMAN ASSIGNED: J. TORIO / F. ROSARIO

SEE AT JOB SITE: F.S.I.

DATE SCHEDULED: 4-19-00

CONTRACT #: S/200 818

TYPE OF SYSTEM: 8500

FEE SERVICE #:

P.O. #:

CALL AUHTORIZED BY | PHONE | EXT

☒ MAINTENANCE ☐ TEST

☐ JOB COMPLETE ☐ JOB INCOMPLETE

☐ SYSTEM ON LINE ☐ SYSTEM OFF LINE

DEPARTED SHOP	TIME IN	TIME OUT	RETURNED SHOP	TOTAL HOURS
AM PM	800 AM PM	430 AM PM	AM PM	

MATERIAL RECORD

QUANTITY	DESCRIPTION	COST
	PREVENTIVE MAINTENANCE CONTRACT	

CUSTOMER NAME (PRINT): SCHERSTEIN

CUSTOMER SIGNATURE

SERVICEMAN SIGNATURE

AUTHORIZATION FOR FIRE ALARM INTERRUPTION
The undersigned has been advised by Fire Service Inc. representative that it may be necessary to interrupt the fire protection service by disconnecting the system and/or a component in the performance of duty assigned work.
The undersigned hereby assumes the responsibility for the notification of the authorities at the time the interruption is initiated and will take all of the precautions deemed necessary during the period of interruption and hold harmless Fire Service Inc. and its employees regarding interruption of the protection service during their service of the equipment.

NAME DATE TIME

SERVICE PERFORMED & REMAINING

S/CONTRACT. Checking Prev. Maintenance Smoke Detectors on Floors 35th/34th Solodon) - / Areas Listed - / System Ale / Reset - / Lobby's Checked D.R. / Signals / Page O.K. -

(A) INACCESSIBLE (B) MISSING (C) DEFECTIVE (D) OTHER

FIRE SERVICE INCORPORATED

21311

Subsidiary of Firecom, Inc.
39-27 Fifty Ninth Street
Woodside, New York 11377
(718) 899-2311

REPORT OF FIELD SERVICE

LOCATIONS | **DEVICES**

INVOICE TO: TWTC
N.Y.C.

FLOOR				CABLE	XMTR#	S/N	TEST
33	ELECT	A-B	(2)	2	191	BLK	✓
	TELEPH	A-B	(2)	2	191	BLK	✓
	COMM	A-B	(2)	2	191	BLK	✓
	ELECT	C-D	(2)	2	192	BLK	✓
	TELEPH	C-D	(2)	2	192	BRK	✓
	COMM	C		2	192	BLK	✓
	ELECT	D.W.		2	192	BLK	✓
	ELECT	F		2	018	PEC3	✓
	ELEC 'G' CLOSET			3	011	PEC3	✓
	SECURITY CLOSET			3	011	PEC3	✓
	ELEV LOBBY	PASS		2	010	BLK	✓
	FREIGHT LOBBY ELEV			2	010	BLK	✓
	SHUTTLE ELEV.			3	027	PEC3	✓
	CORE HDR	AREA	(3)	2	250	PEC3T	✓
	CORE HDR DID.		(2)	2	249	HOCHKI	✓
	W. HDR. AREA		(2)	3	004	PEC3T	✓
	W. HDR DID		(2)	3	036	EDWDS	✓
32	PASS ELEV.			2	009	BLK	✓
	FREIGHT ELEV.			2	009	BRK	✓
	ELECT	A-B	(2)	2	190	BLK	✓
	TELEPH	A-B	(2)	2	190	BRK	✓
	COMM	A-B	(2)	2	190	BRK	✓
	ELECT	C-D	(2)	2	189	BLK	✓
	TELEPH	C-D	(2)	2	189	BLK	✓
	COMM	C		2	189	BLK	✓
	ELECT	D.W.		2	189	BLK	✓
	ELECT	F		3	017	PEC3	✓
	ELECT	G/SEC.	(2)	3	010	PEC3	✓
	SHUTTLE ELEV			3	026	PEC3	✓
	CORE HDR	AREA	(3)	2	248	PEC3T	✓
	CORE HDR	DID	(2)	2	247	HOCHKI	✓
	W. HDR	AREA	(2)	3	003	PEC3T	✓
	W HDR	DID	(2)	3	035	EDWDS	✓

SERVICEMAN ASSIGNED: L. TORNER, F. POSARIO
SEE AT JOB SITE: F.S.I.
DATE SCHEDULED: 4-25-00
CONTRACT #: S/00 818
TYPE OF SYSTEM: 8V00
FEE SERVICE #:
P.O. #:
CALL AUHTORIZED BY:
PHONE:
EXT:

☒ MAINTENANCE ☒ TEST
☐ JOB COMPLETE ☐ JOB INCOMPLETE
☐ SYSTEM ON LINE ☐ SYSTEM OFF LINE

DEPARTED SHOP	TIME IN	TIME OUT	RETURNED SHOP	TOTAL HOURS
AM PM	800 AM PM	430 AM PM	AM PM	

MATERIAL RECORD

QUANTITY	DESCRIPTION	COST
	PREVENTIVE MAINTENANCE CONTRACT	

CUSTOMER NAME (PRINT): SILVERSTEIN
CUSTOMER SIGNATURE:
SERVICEMAN SIGNATURE:

AUTHORIZATION FOR FIRE ALARM INTERRUPTION
The undersigned has been advised by Fire Service Inc. representative that it may be necessary to interrupt the fire protection service by disconnecting the system and/or a component in the performance of their assigned work.
The undersigned hereby assumes the responsibility for the notification of the authorities at the time the interruption is initiated and will take all of the precautions deemed necessary during this period of interruption and hold harmless Fire Service Inc. and its employees regarding interruption of fire protection service during their service of the equipment.

TIME
DATE
NAME

SERVICE PERFORMED & REMAINING

S/C.
PREV. MAINTENANCE CONTINUE TESTING S/O ELECT'M ON SOLOMAN FLOORS
ON SEQUENCE - ALL ZONE / ELEV. LIGHTS / CLOSETS - H.E.E.'S - AS LISTED.
SYSTEM O.K. / RESET AS per operation

(A) INACCESSIBLE (B) MISSING (C) DEFECTIVE (D) OTHER

FIRE SERVICE INCORPORATED

21310

Subsidiary of Firecom, Inc.
39-27 Fifty Ninth Street
Woodside, New York 11377
(718) 899-2311

REPORT OF FIELD SERVICE

LOCATIONS			DEVICES				
FLOOR	PLANT			BASE	ZONE	S/D	TEST
48	ROOF						
	CEILING			4	086	PEC3T	✓
	CEILING			4	086	PEC3T	✓
	CEILING			4	086	PEC3T	✓
	CEILING			4	086	PEC3T	✓
	CEILING			4	086	PEC3T	✓
	CEILING			4	086	PEC3T	✓
48	DUCT	S/D		4	070	EDWDS	✓
48	DUCT	S/D		4	116	EDWDS	✓
48	DUCT	S/D		4	118	EDWDS	✓
48	DUCT	S/D		4	117	EDWDS	✓
48	DUCT	S/D		4	118	EDWDS	✓
48	DUCT	S/D		4	118	~~EDWDS~~ D138	✓
			PREVENTIVE MAINTENANCE CONTRACT				
41½	TEST & DEVICES OUTPUT FUNCTIONS. ALARM - SPK/PULL - STROBE / SMOKE. FANS.						
	(FORCE ELECTRIC - 41½ FL (SOFTWARE / INSTALLATION) -						

INVOICE TO: 7 W.T.C
N.Y.C

SERVICEMAN ASSIGNED: L. TORRES / F. ROSARIO	SEE AT JOB SITE: F.S.I
CONTRACT #: S100818	DATE SCHEDULED: 4-26-00
FEE SERVICE #	TYPE OF SYSTEM: ZSTD
CALL AUHTORIZED BY	P.O. #
PHONE	EXT

☐ MAINTENANCE ☑ TEST

☐ JOB COMPLETE ☐ JOB INCOMPLETE

☐ SYSTEM ON LINE ☐ SYSTEM OFF LINE

DEPARTED SHOP	TIME IN	TIME OUT	RETURNED SHOP	TOTAL HOURS
AM PM	8:00 AM PM	4:30 PM	AM PM	

MATERIAL RECORD

QUANTITY	DESCRIPTION	COST

CUSTOMER NAME (PRINT): SILVERSTEIN

CUSTOMER SIGNATURE

SERVICEMAN SIGNATURE

AUTHORIZATION FOR FIRE ALARM INTERRUPTION
The undersigned has been advised by Fire Service Inc. representative that it may be necessary to interrupt the fire protection service by disconnecting the system and/or a component in the performance of their assigned work.
The undersigned hereby assumes the responsibility for the notification of the authorities at the time the interruption is initiated and will take all of the precautions deemed necessary during the period of interruption and hold harmless Fire Service Inc. and its employees regarding interruption of fire protection service during their service of the equipment.

TIME

DATE

NAME

SERVICE PERFORMED & REMAINING

S/CONTRACT

AS PER CONTRACT CHECK TEST & SMOKE DEVICES DETECTORS - PEC DUCT ON ROOF M.E.R. PANEL - AS LISTED - (SILVERSTEIN BROTHERS) ALSO FACILITY ELEC. CONTRACTOR FOREST / G.C. / SILVERSTEIN ON TEST OF SPRINKLERS / S/P STROBES

(A) INACCESSIBLE (B) MISSING (C) DEFECTIVE (D) OTHER

ON 41½ FLOOR. —

FIRE SERVICE INCORPORATED

: 21312

Subsidiary of Firecom, Inc.
39-27 Fifty Ninth Street
Woodside, New York 11377
(718) 899-2311

REPORT OF FIELD SERVICE

LOCATIONS			DEVICES				
FLOOR				CABLE	VENDOR	S/D	TEST
31	ELECT	A-B	(2)	2	197	BRK	✓
	TELEPH	A-B	(2)	2	197	BRK	✓
	COMM	A-B	(2)	2	197	BRK.	✓
	ELECT	C-D	(COAT) 2	2	186	BRK.	✓
	COMM	C-D	(COAT) 2	2	186	BRK	✓
	ELECT	D.W.	(2)	2	186	BRK	✓
	ELECT	F		3	016	PEC 3	✓
	ELECT	G		3	009	PEC 3	✓
	FREIGHT ELEV.			2	008	BRK	✓
	PASS ELEV.			2	008	BRK	✓
	SHUTTLE ELEV.			3	025	PEC 3	✓
	SECURITY CHIEF			3	009	PEC 3	✓
	CORE MER AREA		(3)	2	244	PEC 3T	✓
	CORE MER D/D		(2)	2	245	HOCHIKI	✓
	W. MER AREA		(2)	3	002	PEC 3T	✓
	W. MER D/D		(2)	3	034	EDWARDS	✓
30th	PASS ELEV.			2	007	BRK	✓
	FREIGHT ELEV			2	007	BRK	✓
	ELECT	A-B	(2)	2	184	BRK	✓
	TELEPH	A-B	(2)	2	184	BRK	✓
	COMM	A-B	(2)	2	184	BRK	✓
	ELECT	C-D	(2)	2	183	BRK	✓
	ELECT	D.W.		2	193	BRK	✓
	ELECT	F		3	015	PEC 3	✓
	ELECT	G/SEC.	(2)	3	008	PEC 3	✓
	TELEPH	C/COAT		2	183	BRK	✓
	COMM	C/COAT		2	183	BRK	✓
	SHUTTLE ELEV.			3	024	PEC 3	✓
	CORE MER CEILING		(3)	2	242	PEC 3T	✓
	CORE MER D/D		(2)	2	243	HOCHIKI	✓
	W. MER AREA		(2)	3	001	PEC 3T	✓
	W. MER D/D		(2)	3	033	EDWARDS	✓

INVOICE TO:
W.T.C.
N.Y.C.

SERVICEMAN ASSIGNED	SEE AT JOB SITE
J. TOLLEY	F.S.I.
F. ROSARIO	DATE SCHEDULED 5-2-00
CONTRACT # S/C 008918	TYPE OF SYSTEM 8500
FEE SERVICE #	P.O. #
CALL AUHTORIZED BY	PHONE / EXT

☒ MAINTENANCE ☐ TEST
☐ JOB COMPLETE ☐ JOB INCOMPLETE
☐ SYSTEM ON LINE ☐ SYSTEM OFF LINE

DEPARTED SHOP	TIME IN	TIME OUT	RETURNED SHOP	TOTAL HOURS
AM PM	800 AM PM	430 AM PM	AM PM	

MATERIAL RECORD

QUANTITY	DESCRIPTION	COST
	PREVENTIVE MAINTENANCE CONTRACT	

CUSTOMER NAME (PRINT) SILVERSTEIN
CUSTOMER SIGNATURE
SERVICEMAN SIGNATURE J. Tolley - Joel Rosario

AUTHORIZATION FOR FIRE ALARM INTERRUPTION
The undersigned has been advised by Fire Service Inc. representatives that it may be necessary to interrupt the fire protection service by disconnecting the system and/or a component in the performance of their assigned work.
The undersigned hereby assumes the responsibility for the notification of the authorities at the time the interruption is initiated and will take all of the precautions deemed necessary during the period of interruption and hold harmless Fire Service Inc. and its employees regarding interruption of the protection service during this service of the equipment.

TIME
DATE
NAME

SERVICE PERFORMED & REMAINING

Continue S/C. Prev. Maintenance on Smoke Detection Floor [31/30 Solomon Area). - System Ok/Reset). -
To be Continue -

(A) INACCESSIBLE (B) MISSING (C) DEFECTIVE (D) OTHER

FIRE SERVICE INCORPORATED

21313

Subsidiary of Firecom, Inc.
39-27 Fifty Ninth Street
Woodside, New York 11377
(718) 899-2311

REPORT OF FIELD SERVICE

LOCATIONS | **DEVICES**

FLOOR	AREAS			CABLE	ZONE	S/D	TST
29	ELECT	A-B	(2)	2	182	BLK.	✓
	TELEPH	A-B	(2)	2	182	BLK	✓
	COMM	A-B	(2)	2	182	BLK	✓
	ELECT	C-D	(2)	2	181	BLK	✓
	ELECT	D.W.		2	181	BLK	✓
	ELECT	G		3	007	PEC3	✓
	SECURITY			3	007	PEC3	✓
	ELECT	F		3	014	PEC3	✓
	TELEPH	C		2	181	BLK	✓
	COMM	C		2	181	BLK	✓
	TELEPH	D/CONF		2	181	BLK	✓
	FREIGHT	ELEV. LBBY		2	006	BLK	✓
	MAIN	ELEV. LBBY		2	006	BLK	✓
	SHUTTLE	ELEV		3	030	PEC3	✓
	CORE	MEZ CEILING		2	240	PEC3T	✓
	CORE	MEZ CEILING		2	240	PEC3T	✓
29	CORE	MEZ CEILING		2	240	PEC3T	✓
	CORE	MEZ D/D		2	241	HONEYWELL	✓
	CORE	MEZ D/D.		2	241	HONEYWELL	✓
	WEST	MEZ AREA		3	032	PEC3T	✓
	WEST	MEZ AREA		3	032	PEC3T	✓
	WEST	MEZ D/D.		3	000	EDWDS	✓
	WEST	MEZ D/D		3	000	EDWDS	✓
6TH	POWER RACK TROUBLE/INCOMING STATUS						
6TH	AMPLIFIER RACK TROUBLE/INCOMING STATUS						
1ST	WARDEN STATION (342.2) LIGHT CKT REMAIN (GROUNDED) - UNIT DISABLE - OUT SERVICE).						

INVOICE TO: 7 W.T.C.

N.Y.C.

SERVICEMAN ASSIGNED	SEE AT JOB SITE
J. TORRES. / F. ROSARIO	F-5-D
DATE SCHEDULED	5-3-00
CONTRACT # 5/C00 818	TYPE OF SYSTEM 8500
FEE SERVICE #	P.O. #
CALL AUHTORIZED BY	PHONE / EXT

☒ MAINTENANCE ☒ TEST
☐ JOB COMPLETE ☐ JOB INCOMPLETE
☐ SYSTEM ON LINE ☐ SYSTEM OFF LINE

DEPARTED SHOP	TIME IN	TIME OUT	RETURNED SHOP	TOTAL HOURS
AM PM	800 AM PM	430 AM PM	AM PM	

MATERIAL RECORD

QUANTITY	DESCRIPTION	COST
	PREVENTIVE MAINTENANCE CONTRACT	

CUSTOMER NAME (PRINT) SILVERSTEIN
CUSTOMER SIGNATURE
SERVICEMAN SIGNATURE J. Torres F. Rosario

AUTHORIZATION FOR FIRE ALARM INTERRUPTION
The undersigned has been advised by Fire Service Inc. representatives that it may be necessary to interrupt the fire protection service by disconnecting the system and/or a component in the performance of their assigned work.
The undersigned hereby assumes the responsibility for the notification of the authorities at the time the interruption is initiated and will take all of the precautions deemed necessary during the period of interruption and hold harmless Fire Service Inc. and its employees regarding interruption of fire protection service during their service of the equipment.

NAME DATE TIME

SERVICE PERFORMED & REMAINING: PREV. MAINTENANCE / SERVICE CONTRACT CHECK TEST UNITS ON 29TH FL. (ALL AREAS) LISTED ALSO LOGGED ON 6TH / 1ST FL. SYSTEM BACK TO OPERATION.

(A) INACCESSIBLE (B) MISSING (C) DEFECTIVE (D) OTHER

FIRE SERVICE INCORPORATED

21314

Subsidiary of Firecom, Inc.
39-27 Fifty Ninth Street
Woodside, New York 11377
(718) 899-2311

REPORT OF FIELD SERVICE

LOCATIONS			DEVICES				
FLOOR	AREAS			CABLE	XTNDR	S/D	TST
27	ELECT	A		2	178	BRK	✓
	ELECT	B		2	178	BRK	✓
	ELECT	C		2	177	BRK	✓
	ELECT	D		2	177	BRK	✓
	TELEPH	A		2	178	BRK	✓
	TELEPH	B		2	178	BRK	✓
	TELEPH	C		2	177	BRK	✓
	TELEPH	D		2	177	BRK	✓
	COMM	A		2	178	BRK	✓
	COMM	B		2	178	BRK	✓
	COMM	C		2	177	BRK	✓
	COMM	D		2	177	BRK	✓
	FREIGHT	ELEV.		2	004	BRK	✓
	PASS	ELEV.		2	004	BRK	✓
	CORE	MEN D/D		2	237	HOOKUP	✓
	CORE	MEN D/D		2	237	HOOKUP	✓
	LADIES	D/D RET.		2	236	HOOKUP	✓
	RETURN	SOUTH		2	236	HOOKUP	✓
	RETURN	NORTH		2	236	HOOKUP	✓
26	ELECT	A-B	(X2)	2	176	BRK	✓
	TELEPH	A-B	(X2)	2	176	BRK	✓
	COMM	A-B	(X2)	2	176	BRK	✓
	ELECT	C-D	(X2)	2	175	BRK	✓
	TELEPH	C-D	(X2)	2	175	BRK	✓
	COMM	C-D	(X2)	2	175	BRK	✓
	FREIGHT	ELEV.		2	003	BRK	✓
	PASS	ELEV 1664		2	003	BRK	✓
	CORE	MEN	D/D	2	235	HOOKUP	✓
	CORE	MEN	D/D	2	235	HOOKUP	✓
	LADIES	RM D/D	RET	2	234	HOOKUP	✓
	RETURN	SOUTH	D/D	2	234	HOOKUP	✓
	RETURN	NORTH	D/D	2	234	HOOKUP	✓

INVOICE TO: 7W.T.C.

N.Y.C

SERVICEMAN ASSIGNED: J. TORRES / F. ROSARIO	SEE AT JOB SITE: F. S.I
	DATE SCHEDULED: 5-9-00
CONTRACT #: SFC 00818	TYPE OF SYSTEM: J800
FEE SERVICE #	P.O. #
CALL AUHTORIZED BY	PHONE / EXT

☒ MAINTENANCE ☒ TEST

☐ JOB COMPLETE ☐ JOB INCOMPLETE

☐ SYSTEM ON LINE ☐ SYSTEM OFF LINE

DEPARTED SHOP	TIME IN	TIME OUT	RETURNED SHOP	TOTAL HOURS
AM / PM	8:00 AM / PM	4:30 AM / PM	AM / PM	

AUTHORIZATION FOR FIRE ALARM INTERRUPTION
The undersigned has been advised by Fire Service Inc. representative that it may be necessary to interrupt the fire protection service by disconnecting the system and/or a component in the performance of their assigned work.
The undersigned hereby assumes the responsibility for the notification of the authorities at the time the interruption is initiated and will take all of the precautions deemed necessary during the period of interruption and hold harmless Fire Service Inc. and its employee regarding interruption of the protection service during their service of the equipment.

DATE

TIME

NAME

MATERIAL RECORD

QUANTITY	DESCRIPTION	COST
	PREVENTIVE MAINTENANCE CONTRACT	

CUSTOMER NAME (PRINT): SILVERSTEIN

CUSTOMER SIGNATURE

SERVICEMAN SIGNATURE

SERVICE PERFORMED & REMAINING: Routine Sl Contract - Prev. Maintenance on Smoke Detection (Software Floors) areas Listed above. - System Clk/Register. As per Operation & Also Repaired / Installed (1) Epson LX 810 Printer Keyboard at 44th A. Security office Software Bottom. - (Cold Boot with Printing.) P.C. Active. - Back in Operation -

(A) INACCESSIBLE (B) MISSING (C) DEFECTIVE (D) OTHER

FIRE SERVICE INCORPORATED

21315

Subsidiary of Firecom, Inc.
39-27 Fifty Ninth Street
Woodside, New York 11377
(718) 899-2311

REPORT OF FIELD SERVICE

LOCATIONS | **DEVICES**

FLOOR				ADDR	XTNDR	S/D	TST
28	Elevs	A		2	180	BAK	V
"	Elevs	B		2	180	BAK	V
"	Elevs	C		2	179	BAK	V
"	Elevs	D		2	179	BAK	V
"	Elevs	DW		2	179	Dec3	V
"	Elevs	E		3	179	Dec3	V
"	Elevs	G		3	180	Dec3	V
"	Tel	A		2	180	BAK	V
"	Tel	B		2	180	BAK	V
"	Tel	C		2	179	BAK	V
"	Comm	A		2	[illegible]	BAK	V
"	Comm	B		2	180	BAK	V
"	Comm	C		2	179	BAK	V
"	Comm	D		2	179	BAK	V
"	Freight	Elev.		2	005	Edwards	V
"	Pass	Elev.		2	005	Edwards	V
"	Shuttle	Elev		3	005	Dec3	V
"	Core	MER		2	239	Honey	V
"	Core	MER		2	239	Honey	V
"	West	MER Ceiling		3	057	Dec3T	V
"	West	MER Ceiling		3	057	Dec3T	V
"	West	MER Ceiling		3	057	Dec3T	V
"	West	MER D/D.		3	047	DI3B	V
(D)	No detector in Security Closet.						

INVOICE TO: T.W.T.C.
N.Y.C.

SERVICEMAN ASSIGNED	SEE AT JOB SITE
J. Jones / F. Rosario	F.S.D
	DATE SCHEDULED: 5-10-00
CONTRACT # S/C 00818	TYPE OF SYSTEM: 8500
FEE SERVICE #	P.O #
CALL AUHTORIZED BY	PHONE / EXT

☒ MAINTENANCE ☒ TEST
☐ JOB COMPLETE ☐ JOB INCOMPLETE
☐ SYSTEM ON LINE ☐ SYSTEM OFF LINE

DEPARTED SHOP	TIME IN	TIME OUT	RETURNED SHOP	TOTAL HOURS
AM / PM	8:00 AM / PM	4:30 AM / PM	AM / PM	

MATERIAL RECORD

QUANTITY	DESCRIPTION	COST
	PREVENTIVE MAINTENANCE CONTRACT	

CUSTOMER NAME (PRINT): [illegible]
CUSTOMER SIGNATURE: [signature]
SERVICEMAN SIGNATURE: [signature]

AUTHORIZATION FOR FIRE ALARM INTERRUPTION
The undersigned has been advised by Fire Service Inc. representatives that it may be necessary to interrupt the fire protection service by disconnecting the system and/or a component in the performance of the assigned work.
The undersigned hereby assumes the responsibility for the notification of the authorities at the time the interruption is initiated and will take all of the precautions deemed necessary during the period of interruption and hold harmless Fire Service Inc. and its employees regarding interruption of the protection service during their service of the equipment.

DATE X TIME NAME

SERVICE PERFORMED & REMAINING

Continue S/Contract - Preventive Maintenance
Per Invoice Detectors Shown Floors Area Listed above -
System Left Re-Setted As Per Operation

(A) INACCESSIBLE (B) MISSING (C) DEFECTIVE (D) OTHER

FIRE SERVICE INCORPORATED

Subsidiary of Firecom, Inc.
39-27 Fifty Ninth Street
Woodside, New York 11377
(718) 899-2311

12047

REPORT OF FIELD SERVICE

LOCATIONS FLOOR	Area		DEVICES Addr	X Tmn	S/D	Tst
40	Elect	A		207	BEK	✓
"	Elect	B		207	BEK	✓
"	Elect	C		"	Apollo	✓
"	Elect	D		"	Apollo	✓
"	Elect	F	(B)			—
"	Elect	G		078	FEC3	✓
40	Tel	A		207	BEK	✓
	Tel	B		207	BEK	✓
"	Storage Closet				Apollo	✓
"	Conf Closet				Apollo	✓
"	Comm	A		207	BEK	✓
"	Comm	B		207	BEK	✓
"	Storage				Apollo	✓
"	Storage				Apollo	✓
40	Freight Elev		(D)	017	BEK	✓
"	Pass Elev			017	BEK	✓
"	Shuttle Elev			006	SI3	✓
"	Security Closet			078	FEC3	✓
"	Core	MER	Ceiling	208	Apollo	✓
"	Core	MER	Ceiling	208	Apollo	✓
"	Core	MER	S/D	271	Apollo	✓
"	Core	MER	S/D	271	Apollo	✓

(B) Head Missing

(D) Head Inside the Ceiling

INVOICE TO: 7 WTC
WTC

SERVICEMAN ASSIGNED	SEE AT JOB SITE
J. Torres	F.S.D.
F. Kissel	DATE SCHEDULED 5-10-00
CONTRACT # S/C 00818	TYPE OF SYSTEM 8500
FEE SERVICE #	P.O. #
CALL AUHTORIZED BY	PHONE / EXT

☒ MAINTENANCE ☒ TEST
☐ JOB COMPLETE ☐ JOB INCOMPLETE
☐ SYSTEM ON LINE ☐ SYSTEM OFF LINE

DEPARTED SHOP	TIME IN	TIME OUT	RETURNED SHOP	TOTAL HOURS
AM PM	8:00 AM PM	4:30 AM PM	AM PM	

MATERIAL RECORD

QUANTITY	DESCRIPTION	COST
	PREVENTIVE MAINTENANCE CONTRACT	

CUSTOMER NAME (PRINT) SILVERSTEIN
CUSTOMER SIGNATURE
SERVICEMAN SIGNATURE

SERVICE PERFORMED & REMAINING

Performed S/Cont Test - Preventive Maintenance On Smoke Detectors Throughout Floors Area Listed Above. System OK Tested Ok Per Operations.

AUTHORIZATION FOR FIRE ALARM INTERRUPTION
The undersigned has been advised by Fire Service Inc. representative that it may be necessary to interrupt the fire protection service by disconnecting the system and/or a component in the performance of their assigned work.
The undersigned hereby assumes the responsibility for the notification of the authorities at the time the interruption is initiated and will take all of the precautions deemed necessary during the period of interruption and hold harmless Fire Service Inc. and its employees regarding interruption of fire protection service during their service of the equipment.

NAME DATE TIME

(A) INACCESSIBLE (B) MISSING (C) DEFECTIVE (D) OTHER

FIRE SE[ ]ICE INCORPORAT[ ]D

91762

SUBSIDIARY OF FIRECOM INC.

39-27 FIFTY NINTH STREET
WOODSIDE, NEW YORK 11377
(718)899-2311

REPORT OF FIELD SERVICE

INVOICE TO

SERVICED
7 WTC.
NY

NY

CALL AUTHORIZED BY	CONTRACT #	FEE SERVICE #	FJ #	P O #	SEE AT JOB SITE
T.T Shop	SC# 0818				F.S.D
PHONE / EXT	DATE SCHEDULED	TIME SCHEDULED			SERVICEMAN ASSIGNED
	4/26/00	AM			C. Tobar

MATERIAL RECORD

QUANTITY ISSUED	QUANTITY B/O	FCI NO	DESCRIPTION	UNIT PRICE	PER	TOTAL AMOUNT
			PREVENTIVE MAINTENANCE CONTRACT			

CHECK APPROPRIATE BOX

- ☐ Q.C
- ☐ I & T
- ☐ FEE CALL
- ☐ DELIVERY
- ☐ DEMO
- ☐ EMERGENCY CALL
- ☒ CONTRACT CALL
- ☐ PICK UP
- ☐ DEMO OWNER
- ☐ SURVEY

DEPARTED SHOP	TIME IN	TIME OUT	RETURNED SHOP	TOTAL HOURS	START MILEAGE	END MILEAGE	MISC EXPENSE	CAR FARE
8:00	9:00	4:30		8:00				
AM	AM	PM						

- ☐ MAT RECD ☐ PARTIAL
- ☐ OTHER ☐ LABOR RECD

I & T COMPLETE ☐ CALL COMPLETE ☐

SERVICE DATE

WILL RETURN ON

CUSTOMER SIGNATURE
James Cavagin

SERVICEMAN SIGNATURE

PROBLEM—AS DESCRIBED

Preventive Maintenance

SERVICE PERFORMED

I Assisted To Tony Torres Cleaned & Tested of Smoke detectors (Duct and Area Located on 48th floor M.E.P.. All Smoke detector tested Work properly Also Assisted Techs. To test 47th floor Devices Coloration floor

WORK REMAINING

FCI 155
REV 6186

AUTHORIZATION FOR FIRE ALARM INTERRUPTION

The undersigned has been advised by Fire Service Inc. representative that it may be necessary to interrupt the fire protection service by disconnecting the system and/or a component in the performance of their assigned work.

The undersigned hereby assumes the responsibility for the notification of the authorities at the time the interruption is initiated and will take all of the precautions deemed necessary during the period of interruption and hold Hamilton Fire Service Inc. and its employees regarding interruption of the protection service during their service of the equipment.

Name

Date

FIRE SERVICE INCORPORATED

26061

Subsidiary of Firecom, Inc.
39-27 Fifty Ninth Street
Woodside, New York 11377
(718) 899-2311

REPORT OF FIELD SERVICE

LOCATIONS			DEVICES				
FLOOR	AREA	CHART		CABLE	ZONE	S/D	TEST
36	ELEV. LOBBY			2	013	BLK	✓
	FREIGHT ELEV			2	013	BLK	✓
	ELEV MACHINE			4	002	PEC 3	✓
	5th ELECTRIC			4	074	PEC 3	✓
	SECURITY CONSOLE			4	074	PEC 3	✓
	CORE MEN Ceiling			2	256	PEC 3T	✓
	CORE MEN	"		2	256	PEC 3T	✓
	CORE WOM	"		2	256	PEC 3T	✓
	CORE DUCT DET.			2	255	HOCHIKI	✓
	CORE DUCT DET.			2	255	HOCHIKI	✓
	CORE DUCT DET.			2	255	HOCHIKI	✓
	ELECT.	A		2	198	BLK	✓
	COMM	A		2	198	BLK	✓
	TELEPH	A		2	198	BLK	✓
	TELEPH	B		2	198	BLK	✓
	ELECT	B		2	198	BLK	✓
	COMM	B		2	198	BLK	✓
	ELECT	C		2	197	BLK	✓
	COMM	C		2	197	BLK	✓
	TELEPH	C		2	197	BLK	✓
	ELECT	D		2	197	BLK	✓
	TELEPH	D		2	197	BLK	✓
	ELECT	D1		2	197	BLK	✓
	ELECT	F		4	050	PEC 3	✓
36	WEST	MEN	AREA	4	026	PEC 3T	✓
	WEST	MEN	AREA	4	026	PEC 3T	✓
	WEST	MEN	D/D	4	098	EDWARDS	✓
	WEST	MEN	D/D	4	098	EDWARDS	✓

PREVENTIVE MAINTENANCE CONTRACT

INVOICE TO: W.T.C.

N.Y.C.

SERVICEMAN ASSIGNED: J. TORRES / F. ROSARIO	SEE AT JOB SITE: F.S.I.
	DATE SCHEDULED: 4-18-00
CONTRACT #: 00 818	TYPE OF SYSTEM: 8500
FEE SERVICE #	P O #
CALL AUHTORIZED BY	PHONE / EXT

☒ MAINTENANCE ☒ TEST
☐ JOB COMPLETE ☐ JOB INCOMPLETE
☐ SYSTEM ON LINE ☐ SYSTEM OFF LINE

DEPARTED SHOP	TIME IN	TIME OUT	RETURNED SHOP	TOTAL HOURS
8:00 AM/PM	9:00 AM/PM	4:30 AM/PM	AM/PM	

MATERIAL RECORD

QUANTITY	DESCRIPTION	COST

CUSTOMER NAME (PRINT): ROSENSTEIN

CUSTOMER SIGNATURE:

SERVICEMAN SIGNATURE: Frederick Rosario

AUTHORIZATION FOR FIRE ALARM INTERRUPTION
The undersigned has been advised by Fire Service Inc. representative that it may be necessary to interrupt the fire protection service by disconnecting the system and/or a component as the performance of their assigned work.
The undersigned hereby assumes the responsibility for the notification of the authorities at the time the interruption is initiated and will take all of the precautions deemed necessary during this period of interruption and hold harmless Fire Service Inc. and its employees regarding interruption of fire protection service during their service of the equipment.

TIME / DATE / NAME

SERVICE PERFORMED & REMAINING: CONTINUE S/CONTRACT.

PREV. MAINTENANCE on SMOKE DETECTORS (Duct) on Selected Floors
ROOF / CLOSETS - ELEV LOBBIES - MEN'S / DUCTS Duct as listed above. —
SYSTEM ACK / RESETED BACK TO OPERATION. —

(A) INACCESSIBLE (B) MISSING (C) DEFECTIVE (D) OTHER

FIRE SERVICE INCORPORATED

.26063

Subsidiary of Firecom, Inc.
39-27 Fifty Ninth Street
Woodside, New York 11377
(718) 899-2311

REPORT OF FIELD SERVICE

LOCATIONS				DEVICES			
FLOOR				CABLE	XTNDR	S/D	TST
38	ELECT	A-B	(2)	2	202	BRK	✓
	TELEPH	A-B	(2)	2	202	BRK	✓
	COMM	A-B	(2)	2	202	BRK	✓
	ELECT	C		2	203	BRK	✓
	ELECT	D		2	203	BRK	✓
	ELECT	D1		2	203	EDWDS	✓
	ELECT	G		4	076	PEC3	✓
	SECURITY			4	076	PEC3	✓
	ELECT	F		4	052	PEC3	✓
	FREIGHT ELEV			2	015	BRK	✓
	PASS ELEV.			2	015	BRK	✓
	ELEV SHUTTLE			4	004	PEC3	✓
	CORE HER AREA		(3)	2	260	PEC3T	✓
	CORE HER D/D		(2)	2	261	HOCHKI	✓
	W. HER AREA			4	028	PEC3T	✓
	W. HER D/D			4	100	EDWDS	✓
38	W. HER AREA	AUDITH		4	046	PEC3T	✓
38	W. HER D/D	AUDTH		4	127	EDWDS	✓
37	PASS/FREIGHT		(2)	2	014	BRK	✓
	TELEPH	A-B	(2)	2	200	BLK	✓
	ELECT	A-B	(2)	2	200	BLK	✓
	COMM	A-B	(2)	2	200	BLK	✓
	TELEPH	C-D	(2)	2	199	BLK	✓
	ELECT	C-D	(2)	2	199	BLK	✓
	COMM	C		2	199	BRK	✓
	ELECT	D1		2	199	BLK	✓
	ELECT	F		4	051	PEC3	✓
	ELECT	G		4	075	PEC3	✓
	SECURITY			4	075	PEC3	✓
	ELEV. SHUTTLE			4	003	PEC3	✓
	CORE HER AREA		(3)	2	258	PEC3T	✓
	CORE HER D/D		(2)	2	257	HOCHKI	✓
	W. HER AREA		(2)	4	027	PEC3T	✓
	W. HER D/D		(2)	4	099	EDWDS	✓

INVOICE TO:
7 W.T.C.
(Silverstein Brothers)
N.Y.C.

SERVICEMAN ASSIGNED	SEE AT JOB SITE
J. Torres / F. Rosario	F.S.D
	DATE SCHEDULED: 4-12-00
CONTRACT #: S/C 00 818	TYPE OF SYSTEM: 8500
FEE SERVICE #	P.O. #
CALL AUHTORIZED BY	PHONE / EXT

☑ MAINTENANCE ☐ TEST
☐ JOB COMPLETE ☐ JOB INCOMPLETE
☐ SYSTEM ON LINE ☐ SYSTEM OFF LINE

DEPARTED SHOP	TIME IN	TIME OUT	RETURNED SHOP	TOTAL HOURS
AM / PM	8:00 AM / PM	4:30 AM / PM	AM / PM	

MATERIAL RECORD

QUANTITY	DESCRIPTION	COST
	PREVENTIVE MAINTENANCE CONTRACT	

CUSTOMER NAME (PRINT): SILVERSTEIN
CUSTOMER SIGNATURE
SERVICEMAN SIGNATURE

AUTHORIZATION FOR FIRE ALARM INTERRUPTION
The undersigned has been advised by Fire Service Inc. representatives that it may be necessary to interrupt the fire protection service by disconnecting the system and/or a component as the performance of their assigned work.
The undersigned hereby assumes the responsibility for the notification of the authorities at the time the interruption is initiated and will take all of the precautions deemed necessary during the period of interruption and hold harmless Fire Service Inc. and its employees regarding interruption of the protection service during their service of the equipment.

NAME _____ DATE _____ TIME _____

SERVICE PERFORMED & REMAINING: Certified Sprinkler Contract / Preventive Maintenance / Smoke Detection on Floors 38/37 - Areas Listed. / Walk Through Testing Required - Company Visit Performed Properly - / To Follow S/C.

(A) INACCESSIBLE (B) MISSING (C) DEFECTIVE (D) OTHER

FIRE SERVICE INCORPORATED

21920

Subsidiary of Firecom, Inc.
39-27 Fifty Ninth Street
Woodside, New York 11377
(718) 899-2311

REPORT OF FIELD SERVICE

LOCATIONS | **DEVICES**

FLOOR				CABLE	XTNDR	S/D	TST CLEAN
39	ELECT	A		2	205	BRK	✓
	TELEPH	A		2	205	BRK	✓
	COMM	A		2	205	BRK	✓
	ELECT	B		2	205	BRK	✓
	COMM	B		2	205	BRK	✓
	TELEPH	B		2	205	BRK	✓
	ELECT	C		2	204	BLK	✓
	ELECT	D		2	204	BLK	✓
	ELECT	DW-1		2	205	BLK	✓
	ELECT	E		4	053	PEC 3	✓
	ELECT	G		4	077	PEC3	✓
	SECURITY			4	077	PEC 3	✓
	ELEV. PASS			2	016	BRK	✓
	FREIGHT ELEV.			2	016	BRK	✓
	ELEV. SHUTTLE			4	005	PEC3	✓
	CORE HER AREA			2	262	PEC 3	✓
	CORE HER AREA			2	262	PEC 3	✓
	CORE HER AREA			2	262	PEC3T	✓
	CORE HER D/D			2	263	Hochiki	✓
	CORE HER D/D			2	263	Hochiki	✓
39	WEST HER D/D			4	101	EDWDS	✓
	W. HER AREA			4	029	PEC3T	✓
	D/D CEILING	RECP.T.		2	254	S-5022 Apollo	✓
	D/D	〃	〃	2	254	〃	✓
	D/D	〃	〃	2	254	〃	✓
	D/D	〃	〃	2	254	〃	N/A
	D/D	〃	〃	2	254	〃	N/A

INVOICE TO:
J.W.T.C.
(Solomon Brothers)
N.Y.C.

SERVICEMAN ASSIGNED	SEE AT JOB SITE
J. Torres / F. Rosario	F.S.D
CONTRACT #	DATE SCHEDULED
S/C 00818	4-11-00
FEE SERVICE #	TYPE OF SYSTEM
	8500
CALL AUHTORIZED BY	PO #
	PHONE / EXT

☐ MAINTENANCE ☐ TEST
☐ JOB COMPLETE ☐ JOB INCOMPLETE
☐ SYSTEM ON LINE ☐ SYSTEM OFF LINE

DEPARTED SHOP	TIME IN	TIME OUT	RETURNED SHOP	TOTAL HOURS
800 AM PM	800 AM PM	330 PM	330 PM	

MATERIAL RECORD

QUANTITY	DESCRIPTION	COST
	PREVENTIVE MAINTENANCE CONTRACT	

CUSTOMER NAME (PRINT)
CUSTOMER SIGNATURE
SERVICEMAN SIGNATURE

AUTHORIZATION FOR FIRE ALARM INTERRUPTION
The undersigned has been advised by Fire Service Inc. representative that it may be necessary to interrupt the fire protection service by disconnecting the system and/or a component in the performance of their assigned work.
The undersigned hereby assumes the responsibility for the notification of the authorities at the time the interruption is initiated and will take all of the precautions deemed necessary during the period of interruption and hold harmless *Fire Service Inc. and its employees* regarding interruption of the protection service during their service of the equipment.

NAME DATE TIME

SERVICE PERFORMED & REMAINING

S/CONTRACT - PREV. MAINTENANCE (SMOKE) DETECTION PASS E EQUIPMENT - ON - 39TH FLOOR - (AREAS LISTED) - SYSTEM LEFT/RESET As per operation

(A) INACCESSIBLE (B) MISSING (C) DEFECTIVE (D) OTHER

(39)

FIRE SERVICE INCORPORATED

Subsidiary of Firecom, Inc.
39-27 Fifty Ninth Street
Woodside, New York 11377
(718) 899-2311

11784

REPORT OF FIELD SERVICE

LOCATIONS			DEVICES				
FLOOR				S/D	CMK	STNDR	TST
23	MECH	RM	D/D	Apollo	2	264	✓
23	MECH	RM	D/D	Apollo	2	264	✓
23	MECH	RM. AREA	HEAT	Apollo	2	268	✓
23	MECH	RM AREA	HEAT	Apollo	2	268	✓
23	BUNK	RM AREA		Apollo	2	269	✓
23	BUNK	RM AREA		Apollo	2	269	✓
23	CONF. RM/CLASS RM (S. WEST CORNER)		(4) UNDER FLOOR		2	265	✓
23	CONF RM/CLASS RM (S. W. CORNER) U/F.		(4)		2	265	✓
23	QUATER'S MASTER UNDER/FLOOR -		(3)		2	266	✓
23	MOTOR/A RM U/FLOOR		(4)		2	266	✓
23	WATCH COMMAN CENTER UNDER/FLOOR. —		(9)		2	266	✓
7	TANK RM AREA/COMBO		(2)		1-110		✓
7	GENERATOR RM		(5)		1-110		✓
47	RADIO COMM. ROOM. (ROOF)		(2) AREA/COMBO	Apollo	2-270		✓
23	MANUAL PULL STATIONS		(3)		2-032		✓

INVOICE TO:
7 W.T.C
W.T.C MAYOR'S OFFICE
23rd Fl.

SERVICEMAN ASSIGNED: J. TORRES / F. ROSADO	SEE AT JOB SITE: F.S.I.
	DATE SCHEDULED: 4-7-00
CONTRACT #	TYPE OF SYSTEM: 8500
FEE SERVICE #	PO #
CALL AUHTORIZED BY	PHONE / EXT

☒ MAINTENANCE ☐ TEST
☐ JOB COMPLETE ☐ JOB INCOMPLETE
☐ SYSTEM ON LINE ☐ SYSTEM OFF LINE

DEPARTED SHOP	TIME IN	TIME OUT	RETURNED SHOP	TOTAL HOURS
8:30 AM/PM	9:00 AM/PM	4:30 PM	AM/PM	

MATERIAL RECORD

QUANTITY	DESCRIPTION	COST
	PREVENTIVE MAINTENANCE CONTRACT	

CUSTOMER NAME (PRINT)
CUSTOMER SIGNATURE Ray Lynch JR
SERVICEMAN SIGNATURE

AUTHORIZATION FOR FIRE ALARM INTERRUPTION
The undersigned has been advised by Fire Service Inc. representative that it may be necessary to interrupt the fire protection service by disconnecting the system and/or a component in the performance of their assigned work.
The undersigned hereby assumes the responsibility for the notification of the authorities at the time the interruption is installed and will take all of the precautions deemed necessary during the period of interruption and hold harmless Fire Service Inc. and its employees regarding interruption of fire protection service during their service of the equipment.

NAME DATE TIME

SERVICE PERFORMED & REMAINING: Continued Service Contract Prev. Maintenance / Located South of Smoke Detectors U/Floors Areas. - (As Listed) On 23rd & 47th & 07th Floors - (As Listed). — Also Tested (3) Manual pull stations (2-032). - Check/Strobe Alarm/Trouble Voltages O.K. —

(A) INACCESSIBLE (B) MISSING (C) DEFECTIVE (D) OTHER

FIRE SERVICE INCORPORATED

26064

Subsidiary of Firecom, Inc.
39-27 Fifty Ninth Street
Woodside, New York 11377
(718) 899-2311

REPORT OF FIELD SERVICE

(SHAFT'S)

LOCATIONS | **DEVICES**

FLOOR				CABLE	X'NDR	S/D	TST
47	SHUTTLE ELEV	WEST		4	037	PEC3T	✓
47	SHUTTLE ELEV.	EAST		4	037	PEC3T	✓
43	E.H.R. PE1.2 (BATH RM ENT.)			4	064	PEC3	✓
16	E.H.R	AREA	EAST	1	195	BRK	✓
16	E.H.R	AREA	EAST	1	195	BRK	✓
16	E.H.R	D/D	EAST	1	254	EDWDS	✓
16	EHR	AREA	WEST	1	195	BRK	✓
16	E.H.R	D/D	WEST	1	254	EDWDS	✓
15	E.H.R	AREA	WEST	1	192	BRK	✓
15	E.H.R	AREA	EAST	1	192	BRK	✓
15	E.H.R	AREA	EAST	1	192	BRK	✓
3RD	SHUTTLE ELEV.	SHAFT		3	049	PEC3T	✓
2	E.H.R HE 3+2			3	005	PEC3T	✓

PREVENTIVE MAINTENANCE CONTRACT

INVOICE TO: 7 W.T.C.
N.Y.C.

SERVICEMAN ASSIGNED: J. TORRES / F. ROSARIO	SEE AT JOB SITE: F.J.
CONTRACT #: S/C00 818	DATE SCHEDULED: 4-7-00
FEE SERVICE #	TYPE OF SYSTEM: 8500
CALL AUHTORIZED BY	P.O. #
PHONE	EXT

☒ MAINTENANCE ☒ TEST
☐ JOB COMPLETE ☐ JOB INCOMPLETE
☐ SYSTEM ON LINE ☐ SYSTEM OFF LINE

DEPARTED SHOP	TIME IN	TIME OUT	RETURNED SHOP	TOTAL HOURS
90 AM (PM)	430 AM (PM)	830 AM (PM)	AM PM	

P.M.

MATERIAL RECORD

QUANTITY	DESCRIPTION	COST

CUSTOMER NAME (PRINT): PAT. RINELLA (FOR J. CORRIGAN)
CUSTOMER SIGNATURE
SERVICEMAN SIGNATURE

AUTHORIZATION FOR FIRE ALARM INTERRUPTION
The undersigned has been advised by Fire Service Inc. representatives that it may be necessary to interrupt the fire protection service by disconnecting the system and/or a component in the performance of their assigned work.
The undersigned hereby assumes the responsibility for the notification of the authorities at the time the interruption is initiated and will take all of the precautions deemed necessary during this period of interruption and hold harmless Fire Service Inc. and its employees regarding interruption of the protection service during their service of the equipment.

NAME DATE TIME

SERVICE PERFORMED & REMAINING

Per Maintenance Elevators SHAFTS - S/D Detection (as listed) Cleaned by OTIS Mechanic - Also E.H.R.'s Areas - System Reset Restored Back to Operation. —

(A) INACCESSIBLE (B) MISSING (C) DEFECTIVE (D) OTHER

(16)

FIRE SERVICE INCORPORATED

26059

Subsidiary of Firecom, Inc.
39-27 Fifty Ninth Street
Woodside, New York 11377
(718) 899-2311

REPORT OF FIELD SERVICE

LOCATIONS			DEVICES			
FLOOR	PRESS	RH	XMTR	S/D	SERIAL	TEST
23	U/F	DOOR	2-266	DIA-3	E6112A3	✓
	U/F		2-266	"	E9412A3	✓
	U/F		2-266	"	E6112A3	✓
	U/F		2-266	"	E8112A3	✓
*	U/F		N/A - LOCATION NEEDED			—
23	E.O. CENTR					
	PODIUM	U/F	2-267	DIA-3	E9430Y4	✓
	PODIUM	U/F	2-267	DIA-3	E9438Y4	✓
	PODIUM	U/F	2-267	DIA-3	E9438Y41	✓
23	E.O.C HEATRS					
	# 1-4	TWR	2-267	DIA-3		✓
	# 5-8	TWR	2-267	DIA-3		✓
	# 9-12	TWR	2-267	DIA-3		✓
	# 13-16	TWR	2-267	DIA-3		✓
	# 17-20	TWR	2-267	DIA-3		✓
	# 21-24	TWR	2-267	DIA-3		✓
	# 25-28	TWR	2-267	DIA-3		✓
	# 29-32	TWR	2-267	DIA-3		✓

1 HR RETURN

TO BE CONTINUED

INVOICE TO:
T.W.T.C.
O.E.M. - 23RD FL.
N.Y.C.
MAYOR'S OFFICE

SERVICEMAN ASSIGNED: J. TORRES / F. ROSADO
SEE AT JOB SITE: F.S.I / RAY LYNCH
DATE SCHEDULED: 4-6004-7-00
CONTRACT #: 4-6004
TYPE OF SYSTEM: 8100
FEE SERVICE #: 5/L 00
P.O. #:
CALL AUHTORIZED BY | PHONE | EXT

☑ MAINTENANCE ☐ TEST
☑ JOB COMPLETE ☐ JOB INCOMPLETE
☐ SYSTEM ON LINE ☐ SYSTEM OFF LINE

DEPARTED SHOP	TIME IN	TIME OUT	RETURNED SHOP	TOTAL HOURS
8:00 AM PM	9:00 AM PM	4:30 AM PM	AM PM	

MATERIAL RECORD

QUANTITY	DESCRIPTION	COST
	PREVENTIVE MAINTENANCE CONTRACT	

CUSTOMER NAME (PRINT)
CUSTOMER SIGNATURE: Ray Lynch F.S.I.
SERVICEMAN SIGNATURE: J. Torres

AUTHORIZATION FOR FIRE ALARM INTERRUPTION
The undersigned has been advised by Fire Service Inc. representatives that it may be necessary to interrupt the fire protection serves by disconnecting the system and/or a component in the performance of their assigned work.
The undersigned hereby assumes the responsibility for the notification of the authorities of the time the interruption is initiated and will take all of the precautions deemed necessary during the period of interruption and hold harmless Fire Service Inc. and its employees regarding resumption of fire protection service during their service of the equipment.

NAME DATE TIME

SERVICE PERFORMED & REMAINING: Perf. Maintenance on Smoke Detectors Units -- Located on 23rd Fl. - Above Underfloor - (As Listed above) Units Terminated Directly to Class 'E' System. NOTE: Units Over Six Floors - Tiles Rugs Needed to be Lifted. - & Units Search/Located. - Escort Needed.

(A) INACCESSIBLE (B) MISSING (C) DEFECTIVE (D) OTHER

FIRE SERVICE INCORPORATED

26060

Subsidiary of Firecom, Inc.
39-27 Fifty Ninth Street
Woodside, New York 11377
(718) 899-2311

REPORT OF FIELD SERVICE

LOCATIONS	DEVICES
FLOOR	
47	ELEV SHAFT Cage 44/47 SHUTTLE
	CABLE 4 XTNDR 037 S/O PEC 3T
46	KITCHEN SHUTTLE #38 CAR
	CABLE 4 036 PEC 3T
46	FREIGHT SHUTTLE HKEY ROOM
	4-036 PEC 3T
47	EHR CAR 21-28
	CABLE 2-220 BLK
47	EHR CAR 21-28
	CABLE 2-220 BLK.
47	EHR CAR 21-28
	CABLE 4 067 PEC 3
46	EHR HKE 2-3
	CABLE 4 065 PEC 3
46	EHR HKEY
	CABLE 4-066 PEC 3
31	EHR AREA
	CABLE 2-188 (2) BLK.
31	EHR DID ECR
	CABLE 2 246 (1) HatKi SIF24
31	EHR AREA - CABLE 1-188 (1) BLK -
	EHR DID ECR CABLE - 2-246 HatKi (1)

INVOICE TO: 7 W.T.C
N.Y.C.
(OTIS)

SERVICEMAN ASSIGNED: J. TORRES / F. ROSARIO	SEE AT JOB SITE: FJ.1 / OTIS
	DATE SCHEDULED: 4-6-00
CONTRACT #: S/C 00818	TYPE OF SYSTEM: 85 00
FEE SERVICE #	PO #
CALL AUHTORIZED BY	PHONE / EXT
☑ MAINTENANCE	☐ TEST
☐ JOB COMPLETE	☑ JOB INCOMPLETE
☐ SYSTEM ON LINE	☐ SYSTEM OFF LINE

DEPARTED SHOP	TIME IN	TIME OUT	RETURNED SHOP	TOTAL HOURS
AM PM	430 AM PM	830 AM PM	AM PM	4 P.H.

MATERIAL RECORD

QUANTITY	DESCRIPTION	COST
	PREVENTIVE MAINTENANCE CONTRACT	

CUSTOMER NAME (PRINT): PAT KINSELLA (For J. Cormyer)
CUSTOMER SIGNATURE
SERVICEMAN SIGNATURE

AUTHORIZATION FOR FIRE ALARM INTERRUPTION
The undersigned has been advised by Fire Service Inc. representative that it may be necessary to interrupt the fire protection service by disconnecting the system and/or a component as the performance of their assigned work.
The undersigned hereby assumes the responsibility for the notification of the authorities at the time the interruption is released and will take all of the precautions deemed necessary during this period of interruption and hold harmless Fire Service Inc. and its employees regarding interruption of the protection service during their service of the equipment.

NAME DATE TIME

SERVICE PERFORMED & REMAINING

CHECK TEST of ELEVATOR SHAFT / EHR'S AREAS STRETCHES LISTED BELOW PER CONTRACT.
SYSTEM OCK Blocken. TO BE Continued

(A) INACCESSIBLE (B) MISSING (C) DEFECTIVE (D) OTHER

FIRE SERVICE INCORPORATED

Subsidiary of Firecom, Inc.
39-27 Fifty Ninth Street
Woodside, New York 11377
(718) 899-2311

11756

REPORT OF FIELD SERVICE

LOCATIONS / DEVICES								
FLOOR				CABLE	XTNDR	S/D	TST CLEAN
45	SHUTTLE ELEV			4	011	PEC 3	✓
	PASS ELEV.			2	022	BRK	✓
	FREIGHT ELEV			2	022	BRK	✓
	SHUTTLE KITCHN			4	012	PEC3T	✓
	COMM 'B'			2	217	BRK	✓
	TELEPH B			2	217	BRK	✓
	ELECT B			2	217	BRK	✓
	'G' ELECT. CLOSET			4	013	PEC 3	✓
	SECURITY CLOSET			4	083	PEC 3	✓
	ELECT A			2	217	BRK	✓
	COMM A			2	217	BRK	✓
	AREA 'D' STAIR			4	063	PEC3T	✓
	'F' ELECTRIC			4	059	PEC3T	✓
	EAST A/V PROJECT			4	091	PEC3T	✓
	SHAFT/PROJ. ROOM			4	089	PEC 3	✓
	D/D AHV 45-1			4	123	EDWDS	✓
	D/D TF 45-3			4	094	EDWDS	✓
45	E/EV SHUTTLE			4	019	PEC 2	✓
	D/D TF 45-1			4	092	EDWDS	✓
	D/D AHV 45-2			4	124	EDWDS	✓
	AREA STAIR			4	003	PEC 3	✓
44	ELECT	A-B	(2)	2	215	BRK	✓
	COMM	A-B	(2)	2	215	BRK	✓
	TELEPH	A-B	(2)	2	215	BRK	✓
	E/EV PASS.			4	021	BRK	✓
	FREIGHT E/EV			4	021	BRK	✓
	E/EV. SHUTTLE			4	010	PEC3	✓
	E/EV. SHUTTLE			4	010	PEC 3	✓
	ELECT. 'F'			4	058	TEC 3	✓
	ELECT 'G'			4	082	TEC 3	✓
	SEC. CLOSET			4	082	PEC 3	✓
	WEST MEN CEILING			4	834	PEC3T	✓
	WEST MEN	D/D		4	112	EDWDS	✓

INVOICE TO: P.W.T.C
N.Y.C

SERVICEMAN ASSIGNED: J. TORRES / F. ROSARIO	SEE AT JOB SITE: F.S.I. 4500
	DATE SCHEDULED: 4-5-00
CONTRACT #: S/C 00818	TYPE OF SYSTEM: RDD
FEE SERVICE #	P.O. #
CALL AUHTORIZED BY	PHONE / EXT

☑ MAINTENANCE ☐ TEST
☐ JOB COMPLETE ☐ JOB INCOMPLETE
☐ SYSTEM ON LINE ☐ SYSTEM OFF LINE

DEPARTED SHOP	TIME IN	TIME OUT	RETURNED SHOP	TOTAL HOURS
AM PM	800 AM PM	430 AM PM	AM PM	

MATERIAL RECORD

QUANTITY	DESCRIPTION	COST
	PREVENTIVE MAINTENANCE CONTRACT	

CUSTOMER NAME (PRINT): SILVERSTEIN
CUSTOMER SIGNATURE
SERVICEMAN SIGNATURE

AUTHORIZATION FOR FIRE ALARM INTERRUPTION
The undersigned has been advised by Fire Service Inc. representative that it may be necessary to interrupt the fire protection service by disconnecting the system and/or a component in the performance of their assigned work.
The undersigned hereby assumes the responsibility for the notification of the authorities at the time the interruption is initiated and will take all of the precautions deemed necessary during the period of interruption and hold harmless Fire Service Inc. and its employees regarding interruption of the protection service during their service of the equipment.

NAME _____ DATE _____ TIME _____

SERVICE PERFORMED & REMAINING: Preventive Maintenance on Smoke Detection Units (Station Reset (Listed Above). — Floors 45 & 44th — Unit Tested OK/Reset at Fire Console — to Continue —

(A) INACCESSIBLE (B) MISSING (C) DEFECTIVE (D) OTHER

FIRE SERVICE INCORPORATED

Subsidiary of Firecom, Inc.
39-27 Fifty Ninth Street
Woodside, New York 11377
(718) 899-2311

11770

REPORT OF FIELD SERVICE

LOCATIONS / DEVICES								
FLOOR				CABLE	XMNR	S/D	TST Clean	
47	W HER D/D			4	069	EDWDS	✓	
	W. HER D/D			4	115	EDWDS	✓	
	W HER D/D			4	113	EDWDS	✓	
	ELECT 6			4	085	PEC3T	✓	
	SECURITY			4	085	PEC3T	✓	
	VERTICAL SHAFT			4	068	PEC3T	✓	
	ELEV. SHUTTLE Lbby			4	016	PEC3T	✓	
	ELECT F			4	061	PEC3T	✓	
	ELECT A-B	(2)		2	223	BLK	✓	
	COMM A-B	(2)		2	223	BLK	✓	
	ELECT 'C'	(CLOSET		2	223	BLK	✓	
	COMM 'D'	CLOSET		2	223	BRK	✓	
	STAIR 'B'	LANDING		2	221	EDWDS	✓	
	CORE HER	D/D		2	279	EDWDS	✓	
	CORE HER	AREA	(3)	2	278	PEC3T	✓	
46	FREIGHT Lbby			2	023	BLK	✓	
	ELECT G			4	084	PEC3	✓	
	SEC. CLOSET			4	084	PEC3	✓	
	ELECT B			2	218	BLK	✓	
	COMM B			2	218	BLK	X DEFECT.	
	ELECT A			2	218	BLK	✓	
	COMM A			2	218	BLK	✓	
	ELEV A			2	218	BLK	✓	
	ELEV D			2	219	BLK	✓	
	ELECT D			2	219	BLK	✓	
	COMM D			2	219	BLK.	✓	
	ELEV. SHUTTLE 'H'			4	015	PEC3T	✓	
	ELEV. SHUTTLE F.			4	014	PEC3	✓	
	CORE HER. D/D	(2)		2	277	HONEY	✓	
	CORE AREA.	(3)		2	276	PEC3T	✓	
	ELECT F			4	060	PEC3	✓	
	ELECT C			2	219	PEC3	✓	
	KITCHEN SHUTTLE ELEV.			4	013	PEC3	✓	

INVOICE TO:
2 W.T.C.
N.Y.C.

SERVICEMAN ASSIGNED: J. TORRES / F. ROSARIO	SEE AT JOB SITE: F.S.D.
	DATE SCHEDULED: 4-4-00
CONTRACT #: S/C 00 818	TYPE OF SYSTEM: 850
FEE SERVICE #	PO #
CALL AUHTORIZED BY	PHONE / EXT
☒ MAINTENANCE	☒ TEST
☐ JOB COMPLETE	☐ JOB INCOMPLETE
☐ SYSTEM ON LINE	☐ SYSTEM OFF LINE

DEPARTED SHOP	TIME IN	TIME OUT	RETURNED SHOP	TOTAL HOURS
AM PM	800 AM PM	430 AM PM	AM PM	

MATERIAL RECORD

QUANTITY	DESCRIPTION	COST
	PREVENTIVE MAINTENANCE CONTRACT	

CUSTOMER NAME (PRINT): SILVERSTEIN
CUSTOMER SIGNATURE:
SERVICEMAN SIGNATURE:

AUTHORIZATION FOR FIRE ALARM INTERRUPTION
The undersigned has been advised by Fire Service Inc. representative that it may be necessary to interrupt the fire protection service by disconnecting the system and/or a component in the performance of their assigned work.
The undersigned hereby assumes the responsibility for the notification of the authorities at the time the interruption is initiated and will take all of the precautions deemed necessary during the period of interruption and hold harmless Fire Service Inc. and its employees regarding interruption of fire protection service during this service of the equipment.

NAME DATE TIME

SERVICE PERFORMED & REMAINING

PREV. MAINTENANCE AS PER SERVICE CONTRACT - CLEANED TESTED SMOKE DETECTORS/UNITS ON ABOVE LISTED FLOORS 47 & 46TH (SOLOMON S.B. PLANS). - SYSTEM CLEARED/RESETED AS PER OPERATION. -

(*) 'B COMM. = S/D. DEFECTIVE/CHECK REPLACE PENDING. -

(A) INACCESSIBLE (B) MISSING (C) DEFECTIVE (D) OTHER

FIRE SERVICE INCORPORATED

Subsidiary of Firecom, Inc.
39-27 Fifty Ninth Street
Woodside, New York 11377
(718) 899-2311

15753

REPORT OF FIELD SERVICE

LOCATIONS			DEVICES			
FLOOR	AREA'S		S/D	CABLE	XTNDR	
6	SWITCH GEAR		BRK	1	171	
	"		BRK	1	171	
	"		BRK	1	171	
	"		BRK	1	171	
	"		BRK	1	171	
6	H.V. VAULT	(X4)	BRK	1	171	
	H.V. VAULT	(X4)	BRK	1	171	
	H.V. VAULT	(X4)	BRK	1	171	
	H.V. VAULT	(1)	BRK	1	171	
5	SWITCH GEAR	AREA	BRK	1	170	NORTH
	"	"	BRK	1	170	NORTH
	"	"	BRK	1	170	NORTH
	"	"	BRK	1	170	NORTH
	SWITCH GEAR		BRK	1	170	SOUTH
	"	"	BRK	1	170	SOUTH
	"	"	BRK	1	170	SOUTH
	"	"	BRK	1	170	SOUTH
	H.V. VAULT	AREA	(X6)	1	170	
	H.V. VAULT	AREA	(X6)	1	170	
46	STROBE PANEL	AFL	100	REPAIRS (BATTERIES)		

INVOICE TO: T.W.T.C.
N.Y.C.

SERVICEMAN ASSIGNED: J. TORRES. / F. ROSARIO	SEE AT JOB SITE: F.S.D.
CONTRACT #: SLC00795	DATE SCHEDULED: 3-29-00
FEE SERVICE #	TYPE OF SYSTEM: 8500
CALL AUHTORIZED BY	P.O. #
PHONE	EXT

☒ MAINTENANCE ☐ TEST
☐ JOB COMPLETE ☐ JOB INCOMPLETE
☐ SYSTEM ON LINE ☐ SYSTEM OFF LINE

DEPARTED SHOP	TIME IN	TIME OUT	RETURNED SHOP	TOTAL HOURS
8 AM PM	9 AM PM	430 AM PM	AM PM	

MATERIAL RECORD

QUANTITY	DESCRIPTION	COST
2	BATTERIES 12 VLTS.	

PREVENTIVE MAINTENANCE CONTRACT

CUSTOMER NAME (PRINT): Silverstein
CUSTOMER SIGNATURE: Lawrence Cavanagh
SERVICEMAN SIGNATURE: [signature] Frank Rosario

AUTHORIZATION FOR FIRE ALARM INTERRUPTION
The undersigned has been advised by Fire Service Inc. representative that it may be necessary to interrupt the fire protection service by disconnecting the system and/or a component in the performance of their assigned work.
The undersigned hereby assumes the responsibility for the notification of the authorities at the time the interruption is initiated and will take all of the precautions deemed necessary during the period of interruption and hold harmless Fire Service Inc. and its employee regarding interruption of fire protection service during their service of the equipment.

NAME _____ DATE _____ TIME _____

SERVICE PERFORMED & REMAINING

Quarterly Contract - Prod. Manufacturer as follows: Detectors Floors 6th / 5th FP (Silverstein) High Level Rooms / Vault. - Repairs on 46th Fl. Strobe Panel AFL100 Replaced (2) Batteries 12 Volt. Also Back in Operation

(A) INACCESSIBLE (B) MISSING (C) DEFECTIVE (D) OTHER

FIRE SERVICE INCORPORATED

Subsidiary of Firecom, Inc.
39-27 Fifty Ninth Street
Woodside, New York 11377
(718) 899-2311

15751

REPORT OF FIELD SERVICE

LOCATIONS | **DEVICES**

FLOOR	AREA'S			CABLE	XTNDR	S/D.	T.T. CLEAN
9	ELECT	A		1	179	BRK	✓
	COMM	B		1	179	BRK	✓
	COMM	A		1	179	BRK	✓
	ELECT	B		1	179	BRK	✓
	TELEPH	A		1	179	BRK	✓
	TELEPH	B		1	179	BRK	✓
	PASS	ELECT		1	008	BRK	✓
	FREIGHT	ELECT.		1	008	BRK.	✓
	COMM	C		1	178	BRK	✓
	ELECT	C		1	178	BRK	✓
	TELEPH	C		1	178	BRK	✓
	ELECT	D		1	178	BRK	✓
	COMM	D		1	178	BRK	✓
	TELEPH	D		1	178	BRK	✓
	RETURN	D/D	NORTH	1	238	HOOKLESS	✓
	RETURN	D/D	EAST	1	238	HOOKLESS	✓
	RETURN	D/D	SOUTH	1	238	HOOKLESS	✓
	CORE	MEZ	D/D.	1	239	HOOKLESS	✓
	CORE	MEZ.	D/D.	1	239	HOOKLESS	✓
6	PASS/	FREIGHT	ELEV (2)	1	005	BRK	✓
	COMM.	'A'		1	172	BRK	✓
	ELECT	'A'		1	172	BRK	✓
	TELEPH	'A'		1	172	BRK	✓
	ELECT	'B'		1	172	BRK	✓
	COMM	'B'		1	172	BRK	✓
	TELEPH	'B'		1	172	BRK	✓
	FAN	RM.	AREA	1	173	BRK	✓
	FAN	RM.	AREA	1	173	BRK	✓
	FAN	RM.	AREA	1	173	BRK	✓
	DUCT	S/D.	FAN RM	1	231	HOOKLESS	✓
	DUCT	S/D.	FAN RM	1	229	HOOKLESS	✓
	DUCT	S/D	FAN RM	1	232	HOOKLESS	✓
	DUCT	S/D	FAN RM	1	233	HOOKLESS	✓

INVOICE TO: J.W.T.C.
N.Y.C.

SERVICEMAN ASSIGNED	SEE AT JOB SITE
J. TORRES	F.S.D.
F. ROSARIO	DATE SCHEDULED 3.22.00
CONTRACT # S/C00 818	TYPE OF SYSTEM 8500
FEE SERVICE #	P.O. #
CALL AUTHORIZED BY	PHONE / EXT

☐ MAINTENANCE ☐ TEST
☐ JOB COMPLETE ☐ JOB INCOMPLETE
☐ SYSTEM ON LINE ☐ SYSTEM OFF LINE

DEPARTED SHOP	TIME IN	TIME OUT	RETURNED SHOP	TOTAL HOURS
AM PM	900 AM PM	430 AM PM	AM PM	

MATERIAL RECORD

QUANTITY	DESCRIPTION	COST
	PREVENTIVE MAINTENANCE CONTRACT	

CUSTOMER NAME (PRINT)
CUSTOMER SIGNATURE
SERVICEMAN SIGNATURE

AUTHORIZATION FOR FIRE ALARM INTERRUPTION
The undersigned has been advised by Fire Service Inc. representative that it may be necessary to interrupt the fire protection service by disconnecting the system and/or a component in the performance of their assigned work.
The undersigned hereby assumes the responsibility for the notification of the authorities at the time the interruption is initiated and will take all of the precautions deemed necessary during the period of interruption and hold harmless Fire Service Inc. and its employee regarding interruption of the protection service during their service of the equipment.

NAME DATE TIME

SERVICE PERFORMED & REMAINING: Preventive Maintenance on Smoke Detection Equipment Class-E System on floors 9 & 6th Floor Areas above (Listed). — System Acceptance Testing. —

(A) INACCESSIBLE (B) MISSING (C) DEFECTIVE (D) OTHER

FIRE SERVICE INCORPORATED

Subsidiary of Firecom, Inc.
39-27 Fifty Ninth Street
Woodside, New York 11377
(718) 899-2311

15750

REPORT OF FIELD SERVICE

LOCATIONS			DEVICES				
FLOOR	AREA'S			CABLE	XTNDR	S/D	TEST
R	ELEV. PASS			1	007	BRK	✓
	FREIGHT ELEV			1	007	BLK	✓
	ELECT	A		1	177	BLK	✓
	COMM	A		1	177	BLK	✓
	TELEPH	A		1	177	BLK	✓
	COMM	B		1	177	BLK	✓
	ELECT	B		1	177	BLK	✓
	TELEPH	B		1	177	BLK	✓
	RETURN D/D		NORTH	1	236	Honeywell	✓
*	RETURN D/D		SOUTH	N/A	—	—	—
	RETURN D/D		EAST (Side)	1	236	Honeywell	✓
	CORE MEN D/D			1	237	Honeywell	✓
	CORE MEN D/D			1	237	Honeywell	✓
	COMM	C-D	(2)	1	176	Honeywell	✓
	ELECT	C-D	(2)	1	176	Honeywell	✓
	TELEPH	C-D	(2)	1	176	Honeywell	✓
7	COMM	A		1	175	BLK	✓
	ELECT	A		1	175	BLK	✓
	TELEPH	A		1	175	BLK	✓
	PASS/FREIGHT ELEV			1	006	BLK	✓
	COMM	B		1	175	BLK	✓
	ELECT	B		1	175	BLK	✓
	TELEPH	B		1	175	BLK	✓
	COMM	C		1	174	BLK	✓
	ELECT	C		1	174	BLK	✓
	TELEPH	C		1	174	BLK	✓
	TELEPH	D		1	174	BLK	✓
	ELECT	D		1	174	BLK	✓
	COMM	D		1	174	BLK	✓
	CORE MEN D/D			1	235	Honeywell	✓
	CORE MEN D/D			1	235	Honeywell	✓
	RETURN D/D		NORTH	1	234	Honeywell	✓
	RETURN D/D		SOUTH	1	234	Honeywell	✓

INVOICE TO: 7W.T.C.
N.Y.C.

SERVICEMAN ASSIGNED: J. BAKER, F. ROSARIO	SEE AT JOB SITE: F.S.I.
	DATE SCHEDULED: 3-21-00
CONTRACT #: S/C 00 818	TYPE OF SYSTEM: 8500
FEE SERVICE #	P.O. #
CALL AUHTORIZED BY	PHONE / EXT

☒ MAINTENANCE ☒ TEST
☐ JOB COMPLETE ☐ JOB INCOMPLETE
☐ SYSTEM ON LINE ☐ SYSTEM OFF LINE

DEPARTED SHOP	TIME IN	TIME OUT	RETURNED SHOP	TOTAL HOURS
AM/PM	8:00 AM/PM	4:30 AM/PM	AM/PM	

MATERIAL RECORD

QUANTITY	DESCRIPTION	COST
	PREVENTIVE MAINTENANCE CONTRACT	

CUSTOMER NAME (PRINT): Sean O'Keefe
CUSTOMER SIGNATURE:
SERVICEMAN SIGNATURE: J. Baker F. Rosario

AUTHORIZATION FOR FIRE ALARM INTERRUPTION
The undersigned has been advised by Fire Service Inc. representative that it may be necessary to interrupt the fire protection service by disconnecting the system and/or a component in the performance of their assigned work.
The undersigned hereby assumes the responsibility for the notification of the authorities at the time the interruption is initiated and will take all of the precautions deemed necessary during this period of interruption and hold harmless Fire Service Inc. and its employees regarding interruption of fire protection service during their service of the equipment.

TIME _____ DATE _____ NAME _____

SERVICE PERFORMED & REMAINING

Continuing Scheduled Preventive Maintenance On Smoke Alarm Detectors
Floors 7 & 8 (Listed Above). - Systems Ack/Reset Properly. -
NOTE: 8th Fl. Return Unit South Side Unavailable / No Locate. -
Per Original Request. -

(A) INACCESSIBLE (B) MISSING (C) DEFECTIVE (D) OTHER

FIRE SERVICE INCORPORATED

Subsidiary of Firecom, Inc.
39-27 Fifty Ninth Street
Woodside, New York 11377
(718) 899-2311

15749

REPORT OF FIELD SERVICE

LOCATIONS | **DEVICES**

INVOICE TO: 2 W.T.C. N.Y.C.

FLOOR				CABLE	ZONE	S/D	TEST
11TH	COMM A			1	182	BLK	✓
	ELECT A			1	182	BLK	✓
	TELEPH A			1	182	BLK	✓
	PASS ELEV			1	010	BLK	✓
	COMM B			1	182	BLK	✓
	ELECT B			1	182	BLK	✓
	TELEPH B			1	182	BLK	✓
	FREIGHT ELEV			1	010	BLK	✓
	RETURN PERIMD SOUTH			1	244	HORIZ	✓
	RETURN DID NORTH			1	241	HORIZ	✓
	CORE HER DID			1	243	HORIZ	✓
	CORE HER DID			1	243	HORIZ	✓
	ELEC BK C			1	183	BLK	✓
	COMM C			1	183	BLK	✓
	TELEPH C			1	183	BLK	✓
	TELEPH D			1	183	BLK	✓
	ELECT D			1	183	BLK	✓
	COMM D			1	183	BLK	✓
10TH	PASS/FREIGHT (2)			1	009	BLK	✓
	ELECT A-B (2)			1	181	BLK	✓
	TELEPH A-B (2)			1	181	BLK	✓
	COMM A-B (2)			1	181	BLK	✓
	CORE HER DID			1	241	HORIZ	✓
	CORE HER DID			1	241	HORIZ	✓
	RETURN DID NORTH			1	240	HORIZ	✓
	RETURN DID SOUTH			1	240	HORIZ	✓
	RETURN DID EAST			1	240	HORIZ	✓
	ELECT C-D (2)			1	180	HORIZ	✓
	COMM C-D (2)			1	180	HORIZ	✓
	TELEPH C-D (2)			1	180	HORIZ	✓

SERVICEMAN ASSIGNED: J. TORRES, F. TORRANO | SEE AT JOB SITE: FSI

DATE SCHEDULED: 3-15-00

CONTRACT #: SC00818 | TYPE OF SYSTEM: 8500

FEE SERVICE # | P.O. #

CALL AUTHORIZED BY | PHONE | EXT

☒ MAINTENANCE ☐ TEST

☐ JOB COMPLETE ☐ JOB INCOMPLETE

☐ SYSTEM ON LINE ☐ SYSTEM OFF LINE

DEPARTED SHOP	TIME IN	TIME OUT	RETURNED SHOP	TOTAL HOURS
AM PM	8:00 AM PM	4:30 AM PM	AM PM	

MATERIAL RECORD

QUANTITY	DESCRIPTION	COST
	PREVENTIVE MAINTENANCE CONTRACT	

CUSTOMER NAME (PRINT): [illegible]

CUSTOMER SIGNATURE: [signature]

SERVICEMAN SIGNATURE: [signature]

AUTHORIZATION FOR FIRE ALARM INTERRUPTION
The undersigned has been advised by Fire Service Inc. representative that it may be necessary to interrupt the fire protection service by disconnecting the system and/or a component in the performance of their assigned work.
The undersigned hereby assumes the responsibility for the notification of the authorities at the time the interruption is initiated and will take all of the precautions deemed necessary during the period of interruption and hold harmless Fire Service Inc. and its employees regarding interruption of fire protection service during this service of the equipment.

NAME | DATE | TIME

SERVICE PERFORMED & REMAINING: Routine Prev. Maintenance as per Contract. Test (Phone) Smoke Detectors (Unit on Floors (Listed) Floors 11TH & 10TH Secure Job Leave Back to Operation

(A) INACCESSIBLE (B) MISSING (C) DEFECTIVE (D) OTHER

FIRE SERVICE INCORPORATED

Subsidiary of Firecom, Inc.
39-27 Fifty Ninth Street
Woodside, New York 11377
(718) 899-2311

15748

REPORT OF FIELD SERVICE

LOCATIONS | **DEVICES**

FLOOR	AREA'S			CABLE	WIRING	S/D	TEST/CLEAN
13	COMM	A-B	(2)	1	186	BLK	✓
	ELECT	A-B	(2)	1	186	BLK	✓
	TELEPH	A-B	(2)	1	186	BLK	✓
	PASS FREIGHT		(2)	1(012)	012	BLK	✓
	CORE HER D/D			1	247	Honeywell	✓
	CORE HER D/D			1	247	Honeywell	✓
	ELECT	C		1	187	BLK	✓
	COMM	C		1	187	BLK	✓
	TELEPH	C		1	187	BLK	✓
	RETURN D/D		NORTH	1	246	Honeywell	✓
	RETURN D/D		SOUTH	1	246	Honeywell	✓
	COMM	D		1	187	BLK	✓
	TELEPH	D		1	187	BLK	✓
	ELECTRIC	D		1	187	BLK	✓
12	PASS LOBBY			1	011	BLK	✓
*	COMM	A	(CORE HER)	1	184	BLK	✓
	ELECT	A		1	184	BLK	✓
	TELEPH	A		1	184	BLK	✓
	FREIGHT ELEV			1	011	BLK	✓
	COMM	B		1	184	BLK	✓
	ELECT	B		1	184	BLK	✓
	TELEPH	B		1	184	BLK	✓
*	CORE HER D/D		(E)	1	245	Honeywell	✓
*	CORE HER D/D		(E)	1	245	Honeywell	✓
	RETURN	RETURN	D/D N	1	244	Honeywell	✓
	RETURN	RETURN	D/D S	1	244	Honeywell	✓
	COMM	'C'		1	185	BLK	✓
	ELECT	'C'		1	185	BLK	✓
	TELEPH	'C'		1	185	BLK	✓
	COMM	'D'		1	185	BLK	✓
	ELECT	'D'		1	185	BLK	✓
	TELEPH	'D'		1	185	BLK	✓

INVOICE TO:
2 W.T.C.
N.Y.C.

SERVICEMAN ASSIGNED	SEE AT JOB SITE
J. TORRES	F.S.D.
F. ROSARIO	DATE SCHEDULED 3-14-00
CONTRACT # SF<00818	TYPE OF SYSTEM 8500
FEE SERVICE #	P.O. # 3-14-00
CALL AUHTORIZED BY	PHONE / EXT

☒ MAINTENANCE ☐ TEST
☒ JOB COMPLETE ☐ JOB INCOMPLETE
☐ SYSTEM ON LINE ☐ SYSTEM OFF LINE

DEPARTED SHOP	TIME IN	TIME OUT	RETURNED SHOP	TOTAL HOURS
AM PM	8:00 AM PM	4:20 AM PM	AM PM	

MATERIAL RECORD

QUANTITY	DESCRIPTION	COST
	PREVENTIVE MAINTENANCE CONTRACT	

CUSTOMER NAME (PRINT) SILVERSTEIN
CUSTOMER SIGNATURE
SERVICEMAN SIGNATURE

AUTHORIZATION FOR FIRE ALARM INTERRUPTION
The undersigned has been advised by Fire Service Inc. representative that it may be necessary to interrupt the fire protection service by disconnecting the system and/or a component in the performance of their assigned work.
The undersigned hereby assumes the responsibility for the notification of the authorities at the time the interruption is initiated and will take all of the precautions deemed necessary during the period of interruption and hold harmless Fire Service Inc. and its employees regarding interruption of fire protection service during their service of the equipment.

NAME DATE TIME

SERVICE PERFORMED & REMAINING

Courtesy Service Contract Rec'd. Walkthrough on Class E System - Smoke Detectors Tested/Cleaned on Floors 13/12 Alarm Listed -

NOTE: CORE HER D/D 'LED' - N/G Need to Replace. A Complete Unit Card N/G for Replace -

(A) INACCESSIBLE (B) MISSING (C) DEFECTIVE (D) OTHER

FIRE SERVICE INCORPORATED

Subsidiary of Firecom, Inc.
39-27 Fifty Ninth Street
Woodside, New York 11377
(718) 899-2311

15746

REPORT OF FIELD SERVICE

LOCATIONS			DEVICES				
FLOOR				CABLE	XTNDR	S/D	TST Clean
15	COMM	A		1	190	BLK	✓
	ELECT	A		1	190	BLK	✓
	TELEPH	A		1	190	BLK	✓
	COMM	B		1	190	BLK	✓
	ELECT	B		1	190	BLK	✓
	TELEPH	B		1	190	BLK	✓
	PASS	FREIGHT	(2)	1	014	BLK	✓
(A)	CORE	HER	D/D	1	251	HOLT	✓ LED
	CORE	HER	D/D	1	251	HOLT	✓
	RETURN	HENRY	D/D	1	250	HOLT	✓
(*)	RETURN	SOUTH	NO ACCESS			U/N	*
(*)	COMM	C-D	(2)	1	191	BLK	✓
	ELECT	C-D	(2)	1	191	BLK	✓
	TELEPH	C-D	(2)	1	191	BLK	✓
(*)	'D' COMM. CLOSET		NO ACCESS/FURNITURE				
14	PASS	FREIGHT	(2)	1	013	BLK	✓
	COMM	A		1	188	BLK	✓
	ELECT	A		1	188	BLK	✓
	TELEPH	A		1	188	BLK	✓
	TELEPH	B		1	189	BLK	✓
	COMM	B		1	189	BLK	✓
	ELECT	B		1	188	BLK	✓
	CORE	HER	D/D	1	249	HOLT	✓
	CORE	HER	D/D	1	249	HOLT	✓
	RETURN	D/D		1	248	HOLT	✓
(*)	RETURN	D/D North	NO ACCESS				*
	COMM	C		1	189	BLK	✓
	ELECT	C		1	189	BLK	✓
	TELEPH	C		1	189	BLK	✓
	ELECT	D		1	189	BLK	✓
	TELEPH	D		1	189	BLK	✓
	COMM	D		1	189	BLK	✓
18	TELCOM	RM		1	198	E.DUNS	✓
18	TELCOM	D/D	FAN	1	108	DIB-3	✓

INVOICE TO: T.W.T.C. N.Y.C.

SERVICEMAN ASSIGNED: J. Jones / F. Rosario	SEE AT JOB SITE: F.S.I.
	DATE SCHEDULED: 3-8-00
CONTRACT #: S/C00818	TYPE OF SYSTEM: 8500
FEE SERVICE #	P O #
CALL AUHTORIZED BY	PHONE / EXT

☒ MAINTENANCE ☒ TEST
☐ JOB COMPLETE ☐ JOB INCOMPLETE
☐ SYSTEM ON LINE ☐ SYSTEM OFF LINE

DEPARTED SHOP	TIME IN	TIME OUT	RETURNED SHOP	TOTAL HOURS
AM PM	8:00 AM PM	4:30 PM	AM PM	

MATERIAL RECORD

QUANTITY	DESCRIPTION	COST
	PREVENTIVE MAINTENANCE CONTRACT	

CUSTOMER NAME (PRINT): SILVERSTEIN
CUSTOMER SIGNATURE:
SERVICEMAN SIGNATURE:

AUTHORIZATION FOR FIRE ALARM INTERRUPTION
The undersigned has been advised by Fire Service Inc. representative that it may be necessary to interrupt the fire protection service by disconnecting the system and/or a component in the performance of their assigned work.
The undersigned hereby assumes the responsibility for the notification of the authorities at the time the interruption is initiated and will take all of the precautions deemed necessary during this period of interruption and hold harmless Fire Service Inc. and its employees regarding interruption of fire protection service during their service of the equipment.

TIME / DATE / NAME

SERVICE PERFORMED & REMAINING: CONTINUE S/CONTRACT - PREV. MAINTENANCE INSPECTION 15/14 FLOOR'S (see above).

* NOTE: 15TH FL. 'D' COMM. CLOSET = NO ACCESS DOOR BLOCKED FURNITURE IN WAY.
* CORE HER D/D. L.E.D. TO BE REPLACE / DAMAGED - 15TH FL.
* RETURN DUCTS/DETECTOR (AS PREVIOUS REPORTS) NO ACCESS - SOLID CEILING 15th Fl

(A) INACCESSIBLE (B) MISSING (C) DEFECTIVE (D) OTHER

* 14TH FL. RETURN DUCTS/DETECTOR AS PREVIOUS REPORTS) NO ACCESS (SOLID CEILING) NORTH SIDE

FIRE SERVICE INCORPORATED

Subsidiary of Firecom, Inc.
39-27 Fifty Ninth Street
Woodside, New York 11377
(718) 899-2311

15747

REPORT OF FIELD SERVICE

LOCATIONS | **DEVICES**

INVOICE TO: W.T.C. N.Y.C

FLOOR	ADJ.			CODE	XMTR	S/D	TST/Clean
17	COMM	A-B	(2)	1	197	BLK	✓✓
	ELECT	A-B	(2)	1	197	BLK	✓✓
	TELEPH	A-B	(2)	1	197	BLK	✓✓
	PASS ELEV			1	016	BLK	✓✓
	FREIGHT ELEV			1	016	BLK	✓✓
	CORE HEL	D/D		1	256	HOOK	✓
	CORE HEL	D/D		1	256	HOOK	✓
(*)	RETURN PLENUM	D/D		NO ACCESS			CLOSE
	ELECT	C-D	(2)	1	196	BLK	✓✓
	COMM	C-D	(2)	1	196	BLK	✓✓
	TELEPH	C-D	(2)	1	196	BLK	✓✓
16	COMM	A-B	(2)	1	193	BLK	✓✓
	ELECT	A-B	(2)	1	193	BLK	✓✓
	TELEPH	A-B	(2)	1	193	BLK	✓✓
	TELEPH	C-D	(2)	1	194	BLK	✓✓
	ELECT	C-D	(2)	1	194	BLK	✓✓
	COMM	C-D	(2)	1	194	BLK	✓✓
	PASS LOBBY			1	015	BLK	✓
	FREIGHT LOBBY			1	015	BLK	✓
	CORE HEL	D/D		1	253	HOOK	✓
	CORE HEL	D/D		1	253	HOOK	✓
	PLENUM RETURN	D/D		1	252	HOOK	✓
(*)	" RETURN	SOUTH		NO ACCESS		UNAVAILABLE	

PREVENTIVE MAINTENANCE CONTRACT

SERVICEMAN ASSIGNED: J. BARES / F. COSALO

SEE AT JOB SITE: F.I.D

DATE SCHEDULED: 3-7-00

CONTRACT #: S/C00818

TYPE OF SYSTEM: 8500

FEE SERVICE #:

P.O. #:

CALL AUHTORIZED BY | PHONE | EXT

☒ MAINTENANCE ☒ TEST

☐ JOB COMPLETE ☐ JOB INCOMPLETE

☐ SYSTEM ON LINE ☐ SYSTEM OFF LINE

DEPARTED SHOP	TIME IN	TIME OUT	RETURNED SHOP	TOTAL HOURS
AM PM	800 AM PM	430 AM PM	AM PM	

MATERIAL RECORD

QUANTITY	DESCRIPTION	COST

CUSTOMER NAME (PRINT): SILVERSTEIN

CUSTOMER SIGNATURE

SERVICEMAN SIGNATURE

AUTHORIZATION FOR FIRE ALARM INTERRUPTION
The undersigned has been advised by Fire Service Inc. representative that it may be necessary to interrupt the fire protection service by disconnecting the system and/or a component in the performance of their assigned work.
The undersigned hereby assumes the responsibility for the notification of the authorities at the time the interruption is initiated and will take all of the precautions deemed necessary during the period of interruption and hold Services Fire Service Inc. and its employees regarding interruption of fire protection service during their service of the equipment.

NAME DATE TIME

SERVICE PERFORMED & REMAINING

CONTINUE S/CONTRACT PREV. MAINTENANCE ON FLOORS 17° 16TH AS LISTED

(*) NOTE: 17TH FL. RETURN DUCTS NOT AVAILABLE / NO ACCESS. CEILINGS 16TH RETURN D/D SOUTH SIDE NO ACCESS PROVIDED AS PREVIOUSLY REPORTED

(A) INACCESSIBLE (B) MISSING (C) DEFECTIVE (D) OTHER

FIRE SERVICE INCORPORATED

Subsidiary of Firecom, Inc.
39-27 Fifty Ninth Street
Woodside, New York 11377
(718) 899-2311

15722

REPORT OF FIELD SERVICE

LOCATIONS | **DEVICES**

FLOOR	AREA'S	ELEV.		CABLE	XTN'D'R	S/D	TEST OK
19	ELEVT	B		1	201	BLK	✓
	COMM	B		1	201	BLK	✓
	TELEPH	B		1	201	BLK	✓
	PASS/FREIGHT	ELEV.		1	018	BLK	✓
	ELEVT	A		1	201	BLK	✓
	COMM	A		1	201	BLK	✓
	TELEPH	A		1	201	BLK	✓
	RETURN D/D	NORTH		1	259	HORN/S	✓
	RETURN D/D	SOUTH		1	259	HORN/S	✓
	CORE/MER	SUPPLY		1	260	HORN/S	✓
	COLG/MER	SUPPLY		1	260	HORN/S	✓
	ELEVT	C-D	(2)	1	200	BRK	✓
	COMM	C-D	(2)	1	200	BLK	✓
	TELEPH	C-D	(2)	1	200	BLK	✓
18	COMM	A-B	(2)	1	197	BLK	✓
	ELEVT	A-B	(2)	1	197	BLK	✓
	TELEPH	A-B	(2)	1	197	BLK	✓
(*)	PASS/FREIGHT	ELEV.	(2)	1	016	BLK	✓
	COMM	C-D	(2)	1	196	BLK	✓
	ELEVT	C-D	(2)	1	196	BLK	✓
	TELEPH	C-D	(2)	1	196	BLK	✓

(*) FREIGHT 18TH FL. ELEV. 16SY S/D UNIT. (DEFECTIVE HOSE REPLACED)

PREVENTIVE MAINTENANCE CONTRACT

INVOICE TO: W.T.C
N.Y.C.

SERVICEMAN ASSIGNED: J. TORRES / E. ROSARIO
SEE AT JOB SITE: F.J.I.
DATE SCHEDULED: 3-1-00
CONTRACT #: S/C00818
TYPE OF SYSTEM: 8/100
FEE SERVICE #:
P.O #:
CALL AUHTORIZED BY:
PHONE:
EXT:

☒ MAINTENANCE ☒ TEST
☒ JOB COMPLETE ☐ JOB INCOMPLETE
☐ SYSTEM ON LINE ☐ SYSTEM OFF LINE

DEPARTED SHOP	TIME IN	TIME OUT	RETURNED SHOP	TOTAL HOURS
AM PM	800 AM PM	430 PM	AM PM	

MATERIAL RECORD

QUANTITY	DESCRIPTION	COST

CUSTOMER NAME (PRINT): SILVERSTEIN
CUSTOMER SIGNATURE:
SERVICEMAN SIGNATURE: J. Torres / E. Rosario

AUTHORIZATION FOR FIRE ALARM INTERRUPTION
The undersigned has been advised by Fire Service Inc. representative that it may be necessary to interrupt the fire protection service by disconnecting the system and/or a component in the performance of their assigned work.
The undersigned hereby assumes the responsibility for the nondisclosure of the authorities at the time the interruption is initiated and will take all of the precautions deemed necessary during the period of interruption and hold harmless Fire Service Inc. and its employees regarding interruption of the protection service during their service of the equipment.

NAME _____ DATE _____ TIME _____

SERVICE PERFORMED & REMAINING

Continue S/C. Preventive Maintenance on Floors 19 & 18th (as listed) Units Test/Clean — Check Ack/Reset. Functional outputs O.K. — System Reset — Back to Operation. —

(*) NOTE: 18th Fl Freight 16SY S/D Hose Replaced. — To Follow up. —

(A) INACCESSIBLE (B) MISSING (C) DEFECTIVE (D) OTHER

FIRE SERVICE INCORPORATED

88032

SUBSIDIARY OF FIF[illegible]M INC

39-27 FIFTY NINTH STREET
WOODSIDE, NEW YORK 11377
(718) 899-2311

REPORT OF FIELD SERVICE

INVOICE TO

SERVICED

Silverstein.
7 W TC
Emergency Service.
SATURDAY

CALL AUTHORIZED BY	CONTRACT #	FEE SERVICE #	FJ #	P O #	SEE AT JOB SITE
Service.					Slo Lawrence
PHONE / EXT	DATE SCHEDULED	TIME SCHEDULED			SERVICEMAN ASSIGNED
	15 JANUARY 2000				Newell

MATERIAL RECORD

QUANTITY ISSUED	QUANTITY B/O	FCI NO	DESCRIPTION	UNIT PRICE	PER	TOTAL AMOUNT
			TROUBLE CALL			
			Construction BILLABLE			
			CONTRACT TROUBLE CALL			

CHECK APPROPRIATE BOX

- ☐ Q C
- ☐ I & T
- ☐ FEE CALL
- ☐ DELIVERY
- ☐ DEMO
- ☐ EMERGENCY CALL
- ☐ CONTRACT CALL
- ☐ PICK UP
- ☐ DEMO OWNER
- ☐ SURVEY

DEPARTED SHOP	TIME IN	TIME OUT	RETURNED SHOP	TOTAL HOURS	START MILEAGE	END MILEAGE	MISC EXPENSE	CAR FARE
200	245	350		1.50				

- ☐ MAT REQD
- ☐ PARTIAL
- ☐ OTHER
- ☐ LABOR REQD

SERVICE DATE: 15 JANUARY 2000

CUSTOMER SIGNATURE: Leslie Lawrence

I & T COMPLETE ☐ CALL COMPLETE ☐

WILL RETURN ON

SERVICEMAN SIGNATURE: B. C. Newell

PROBLEM—AS DESCRIBED

Emergency Service.

SERVICE PERFORMED 200 rcvd beep. Contact service and customer. Customer report 43rd FL speaker gone in and out of trouble. Floor under construction. 2:45 arrived at Job site. Met with security. Check F.C.S. 43rd FL speaker in trouble, then trouble reset. Met with Engineer. Access 39th FL and 42nd FL. Construction floors gutted. Speaker open and grounded circuit disconnected grounded field wire 41st FL and 43rd FL, to stabilized F.C.S. Checked F.C.S. -ok speaker in trouble 40-43. Can completed.

WORK REMAINING

* Must clear grounded speakers 41st and 43rd FL

AUTHORIZATION FOR FIRE ALARM INTERRUPTION

The undersigned has been advised by Fire Service Inc. representative that it may be necessary to interrupt the fire protection service by disconnecting the system and/or a component in the performance of their assigned work.

The undersigned hereby assumes the responsibility for the notification of the authorities at the time the interruption is initiated and will take all of the precautions deemed necessary during the period of interruption and hold harmless Fire Service Inc. and its employees regarding interruption of fire protection service during their service of the equipment.

Date

Name

FCI 155
REV 6186

FIRE SERVICE INCORPORATED

88043

SUBSIDIARY OF F. ..OM INC.
39-27 FIFTY NINTH STREET
WOODSIDE, NEW YORK 11377
(718) 899-2311

REPORT OF FIELD SERVICE

INVOICE TO

SERVICED
7 WORLD TRADE CENTER
NEW YORK, N.Y

CALL AUTHORIZED BY	CONTRACT #	FEE SERVICE #	FJ #	PO #	SEE AT JOB SITE
	SC-00818				
PHONE / **EXT**	**DATE SCHEDULED**	**TIME SCHEDULED**			**SERVICEMAN ASSIGNED**
	1-17-00				T. TRONCOSO

MATERIAL RECORD

QUANTITY ISSUED	QUANTITY B/O	FCI NO	DESCRIPTION	UNIT PRICE	PER	TOTAL AMOUNT
2			12VDC/7AH BATTS	69.95		

TROUBLE CALL

CHECK APPROPRIATE BOX

- ☐ Q.C
- ☐ I&T
- ☐ FEE CALL
- ☐ DELIVERY
- ☐ DEMO
- ☐ EMERGENCY CALL
- ☑ CONTRACT CALL
- ☐ PICK UP
- ☐ DEMO OWNER
- ☐ SURVEY

DEPARTED SHOP	TIME IN	TIME OUT	RETURNED SHOP	TOTAL HOURS	START MILEAGE	END MILEAGE	MISC EXPENSE	CAR FARE
12:30 PM	1:30 PM	2:00 PM		1.5				

- ☐ MAT REQD
- ☐ PARTIAL
- ☐ OTHER
- ☐ LABOR REQD

SERVICE DATE: 1-17-00

CUSTOMER SIGNATURE: Sean O'Keef

I&T COMPLETE ☐ CALL COMPLETE ☑

WILL RETURN ON

SERVICEMAN SIGNATURE: T. Troncoso

AUTHORIZATION FOR FIRE ALARM INTERRUPTION

The undersigned has been advised by Fire Service, Inc. representative that it may be necessary to interrupt the fire protection service by disconnecting the system and/or a component in the performance of their assigned work.

The undersigned hereby assumes the responsibility for the notification of the authorities at the time the interruption is initiated and will take all of the precautions deemed necessary during the period of interruption and hold harmless Fire Service Inc. and its employees regarding interruption of fire protection service during their service of the equipment.

Date

Name

PROBLEM—AS DESCRIBED

TROUBLE CALL

SERVICE PERFORMED

REPLACE TWO 12VDC/7AH BATTS. IN AFC-100 STROBE PANEL 20TH FL. MER. ROOM.
PANEL BACK ON LINE.

WORK REMAINING

JOB DONE.

FCI 155
REV 6186

FIRE SERVICE INCORPORATED

: 21937

Subsidiary of Firecom, Inc.
39-27 Fifty Ninth Street
Woodside, New York 11377
(718) 899-2311

REPORT OF FIELD SERVICE

LOCATIONS	DEVICES
FLOOR	
6	STROBE PANEL ACTIVATION (1) AFC 100 - B COMM. - (1) STROBE - 5 SPKRS.
3RD	STROBE PNL ACTIVATION (1) AFC 100 'B' COMM. - STROBES = 10 UNITS
2ND	STROBE PANEL ACTIVATION (1) AFC 100 FREIGHT/ENTRANCE AREA - STROBES = 6 UNITS
1ST	STROBE PANEL ACTIVATION (1) AFC 100 PUMP ROOM - STROBES = 2 UNITS. -
* 26	STROBE PANEL PYRO SYSTM 3 CORE HEA TRouble / NEED (2) BATTERY 6 VOLTS (LOW OUTPUT)
* 12	REPAIRED (1) AFC 101 PANEL - Replaced (1) Battery 12 VOLTS - (LOW OUTPUT) - 'B' COMM. CLOSET
* 11	REPAIRED (1) AFC 101 PANEL (1) Battery Replaced) LEADING UNIT / DEFECTIVE - 'B' COMM. CLOSET -
16	Repaired (1) AFC 100 PANEL - A CKT OUT CHECK / RESISTANCE - O.K. - BACK TO OPERATIONS -

INVOICE TO: 7 WTC.

N.Y.C.

SERVICEMAN ASSIGNED	SEE AT JOB SITE
L. TORRES / F. ROSARIO	DATE SCHEDULED 1-12 DE
CONTRACT # S/C 00 813	TYPE OF SYSTEM 3500
FEE SERVICE #	P.O. #
CALL AUTHORIZED BY	PHONE / EXT

☑ MAINTENANCE ☑ TEST
☐ JOB COMPLETE ☐ JOB INCOMPLETE
☐ SYSTEM ON LINE ☐ SYSTEM OFF LINE

DEPARTED SHOP	TIME IN	TIME OUT	RETURNED SHOP	TOTAL HOURS
AM PM	9 AM	4:30 PM	AM PM	

MATERIAL RECORD

QUANTITY	DESCRIPTION	COST
2	BATTERIES 12 VOLTS	6.95 EACH

PREVENTIVE MAINTENANCE CONTRACT

CUSTOMER PLEASE PRINT: DUBERSTEIN

CUSTOMER SIGNATURE: (PRESENT)

SERVICEMAN SIGNATURE: L. TORRES

NAME DATE TIME

AUTHORIZATION FOR THE ALARM INTERRUPTION
The undersigned has been advised by Fire Service Inc. representative that it may be necessary to interrupt the fire protection service by disconnecting the system under a component in the performance of this assigned work.
The undersigned hereby accepts the responsibility for the watchmen at the time the interruption is initiated and will take all of the precautions deemed necessary during the period of interruption and hold Fire Service Inc. and its employees regarding interruption of the protection service during this service of the equipment.

SERVICE PERFORMED & REMAINING

(1) PER CONTRACT CHECK TESTS) STROBE PANELS (LIGHT M - 6 UNITS FROM ABOVE LISTED) - ALSO REPAIRED / REPLACED (1) BATTERY OUT IN 12 HOUR CLOCK (1) UNIT BATTERIES / IN 11 (LOW OUTPUT) / LEADING UNIT.

(2) 26 FL PANEL PYRO TROUBLE NEEDED (2) UNITS - PENDING -

(A) INACCESSIBLE (B) MISSING (C) DEFECTIVE (D) OTHER

FIRE SERVICE INCORPORATED

70080 01/99

SUBSIDIARY OF F... COM INC
39-27 FIFTY NINTH STREET
WOODSIDE, NEW YORK 11377
(718)899-2311

REPORT OF FIELD SERVICE

INVOICE TO

SERVICED
4 WTC
NY | NY

CALL AUTHORIZED BY	CONTRACT #	FEE SERVICE #	F.J.#	P.O.#	SEE AT JOB SITE
P. Iniviglio	Sch C/E/B				F.S.D

PHONE	EXT	DATE SCHEDULED	TIME SCHEDULED	SERVICEMAN ASSIGNED
		10/13/99	AM	L. Tabor

MATERIAL RECORD

QUANTITY ISSUED	QUANTITY B/O	FCI NO	DESCRIPTION	UNIT PRICE	PER	TOTAL AMOUNT
2.			BATTERIES 12 VOC	69.95		
			PREVENTIVE MAINTENANCE CONTRACT			

CHECK APPROPRIATE BOX

- ☐ O.C
- ☐ I.&T.
- ☐ FEE CALL
- ☐ DELIVERY
- ☐ DEMO
- ☐ EMERGENCY CALL
- ☒ CONTRACT CALL
- ☐ PICK UP
- ☐ DEMO OWNER
- ☐ SURVEY

DEPARTED SHOP	TIME IN	TIME OUT	RETURNED SHOP	TOTAL HOURS	START MILEAGE	END MILEAGE	MISC EXPENSE	CARFARE
8:00 AM	9:00 AM	4:30 PM		5:00				

☐ PAST PERIOD ☐ PARTIAL ☐ OTHER ☐ LABOR REQD

SERVICE DATE: 10/13/99

CUSTOMER SIGNATURE: Sean O'Keeffe

I&T COMPLETE ☐ CALL COMPLETE ☐

VERIFICATION

SERVICEMAN SIGNATURE: [signature]

PROBLEM—AS DESCRIBED

Preventive Maintenance

SERVICE PERFORMED

Cleaned and tested Sensitivity of Smoke detector on 2nd and 3rd floor Risas Closets Elevator Lobbys All detector tested Work OK. Also. Repairs on The 45th floor Strobe Panel Not Deciding To WTC. four Batteries for Replacement on Strobe panel

WORK REMAINING

AUTHORIZATION FOR FIRE ALARM INTERRUPTION

The undersigned has been advised by Fire Service Inc. representative that it may be necessary to interrupt the fire protection service by disconnecting the system and/or a component in the performance of their assigned work.
The undersigned hereby assumes the responsibility for the notification of the authorities at the time the interruption is initiated and will take all of the precautions deemed necessary during the period of interruption and hold Fire Service Inc. and its employees regarding interruption of fire protection service during their service of the equipment

Date

X

Name

FCI 155
REV 6196

FIRE SERVICE INCORPORATED

89235

SUBSIDIARY OF FIR. JM INC.
39-27 FIFTY NINTH STREET
WOODSIDE, NEW YORK 11377
(718) 899-2311

REPORT OF FIELD SERVICE

INVOICE TO

SERVICED
7 W.T.C
NEW YORK . N.Y

CALL AUTHORIZED BY	CONTRACT #	FEE SERVICE #	FJ #	PO #	SEE AT JOB SITE
SHOP	U.P.S = 218				FSP
PHONE / EXT.	DATE SCHEDULED	TIME SCHEDULED			SERVICEMAN ASSIGNED
	2-23-00	300 AM			C. FORERO

C TAGARES

MATERIAL RECORD

QUANTITY ISSUED	QUANTITY B/O	FCI NO	DESCRIPTION	UNIT PRICE	PER	TOTAL AMOUNT
			PREVENTIVE MAINTENANCE CONTRACT			

AUTHORIZATION FOR FIRE ALARM INTERRUPTION

The undersigned has been advised by Fire Service, Inc. representative that it may be necessary to interrupt the fire protection service by disconnecting the system and/or a component in the performance of their assigned work.

The undersigned hereby assumes the responsibility for the notification of the authorities at the time the interruption is initiated and will take all of the precautions deemed necessary during the period of interruption and hold harmless Fire Service Inc. and its employees regarding mis-nution of the protection service during their service of the equipment

Date

Name

CHECK APPROPRIATE BOX

- ☐ O.C
- ☐ I & T
- ☐ FEE CALL
- ☐ DELIVERY
- ☐ DEMO
- ☐ EMERGENCY CALL
- ☒ CONTRACT CALL
- ☐ PICK UP
- ☐ DEMO OWNER
- ☐ SURVEY

DEPARTED SHOP	TIME IN	TIME OUT	RETURNED SHOP	TOTAL HOURS	START MILEAGE	END MILEAGE	MISC EXPENSE	CAR FARE
	12.30	300	430					
	PM	AM	PM					

☐ MAT REQD ☐ PARTIAL
☐ OTHER ☐ LABOR REQD

SERVICE DATE: 2-23-00

CUSTOMER SIGNATURE: Tony Rubino

I&T COMPLETE ☐ CALL COMPLETE ☒

WILL RETURN ON

SERVICEMAN SIGNATURE: C. FORERO

PROBLEM—AS DESCRIBED: PREVENTIVE MAINTENANCE / U.P.S System (10K)

SERVICE PERFORMED: CLEANED AND CHECKED U.P.S System TOOK READINGS CLEANED CABINET, CHECKED 24V MINI FANS ALL RUNING O.K CLEANED FILTERS AND BATTERIES, (U.P.S IT'S OPERATIONAL)

BATTERY AMPS = 2A

TOTAL BATTERY VOLTAGE 140.9 V. D/C

OUTPUT VOLTAGE 6.2 HZ

(LOAD) L-1 = 11.4

L-2 = 11.1

WORK REMAINING: OUTPUT VOLTAGE 250V

INPUT VOLTS 208V A/C

FCI 155
REV 6186

FIRE SERVICE INCORPORATED

21928

Subsidiary of Firecom, Inc.
39-27 Fifty Ninth Street
Woodside, New York 11377
(718) 899-2311

REPORT OF FIELD SERVICE

LOCATIONS			DEVICES					
FLOOR				S/D	CABLE	ZONE/DR	TEST Clean	
24	CORE	HER D/D		Hostile	2	231	✓	
	CORE	HER D/D.		Hostile	2	231	✓	
	ELEV. LOBBY			BLK	2	001	✓	
	FREIGHT ELEV.			BLK	2	001	✓	
	COMM	A		BLK	2	172	✓	
	ELECT	A		BLK	2	172	✓	
	TELEPH	A		BLK	2	172	✓	
	COMM	B		BLK	2	172	✓	
	ELECT	B		BLK	2	172	✓	
	TELEPH	B		BLK	2	172	✓	
	RETURN	D/D	SOUTH	Hostile	2	230	✓	
	RETURN	D/D	NORTH	Hostile	2	230	✓	
	COMM	C		BLK	2	171	✓	
	ELECT	C		BLK	2	171	✓	
	TELEPH	C		BLK	2	171	✓	
	TELEPH	D		BLK	2	171	✓	
	ELECT	D		BLK	2	171	✓	
	COMM	D		BLK	2	171	✓	
22	PASS ELEV.			BLK	1	021	✓	
	FREIGHT ELEV.			BLK.	1	021	✓	
	TELEPH.	A		BLK	1	207	✓	
	ELECT	A		BLK	1	207	✓	
	COMM	A		BLK	1	207	✓	
	ELECT	B		BLK	1	207	✓	
	COMM	B		BLK	1	207	✓	
	TELEPH	B		BLK	1	207	✓	
	COMM	C		BLK	1	206	✓	
	ELECT	C		BLK	1	206	✓	
	TELEPH	C		BLK	1	206	✓	
	TELEPH	D		BLK	1	206	✓	
	ELECT	D		BLK.	1	206	✓	
	COMM	D		BLK	1	206	✓	
	CORE	HER D/D	(2)	Hostile	1	264	✓	
	RETURN	D/D	(2)	Hostile	1	265	✓	

INVOICE TO:
W.T.C.
N.Y.C.

SERVICEMAN ASSIGNED: J. Torres / F. Rosario	SEE AT JOB SITE: F.S.D.
	DATE SCHEDULED: 2-23-00
CONTRACT #: S/C 00 818	TYPE OF SYSTEM: 8500
FEE SERVICE #	P.O. #
CALL AUHTORIZED BY	PHONE / EXT
☐ MAINTENANCE	☐ TEST
☐ JOB COMPLETE	☐ JOB INCOMPLETE
☐ SYSTEM ON LINE	☐ SYSTEM OFF LINE

DEPARTED SHOP	TIME IN	TIME OUT	RETURNED SHOP	TOTAL HOURS
AM / PM	800 AM / PM	430 AM / PM	AM / PM	

MATERIAL RECORD

QUANTITY	DESCRIPTION	COST
	PREVENTIVE MAINTENANCE CONTRACT	

CUSTOMER NAME (PRINT)

CUSTOMER SIGNATURE

SERVICEMAN SIGNATURE

AUTHORIZATION FOR FIRE ALARM INTERRUPTION
The undersigned has been advised by Fire Service Inc. representative that it may be necessary to interrupt the fire protection service by disconnecting the system and/or a component in the performance of their assigned work.
The undersigned hereby assumes the responsibility for the notification of the authorities at the time the interruption is initiated and will take all of the precautions deemed necessary during the period of interruption and hold harmless Fire Service Inc. and its employees regarding interruption of fire protection service during their service of the equipment.

NAME _____ DATE _____ TIME _____

SERVICE PERFORMED & REMAINING: Courtesy S/Contract - Test Flashing D Area's Smoke Detectors (Closet's) + H-E-R Duct's S/D. & Ped Area's Lobbies on Floor (Listed Above). - System Act/Heated Properly. - To Continue. —

(A) INACCESSIBLE (B) MISSING (C) DEFECTIVE (D) OTHER

FIRE SERVICE INCORPORATED

21927

Subsidiary of Firecom, Inc.
39-27 Fifty Ninth Street
Woodside, New York 11377
(718) 899-2311

REPORT OF FIELD SERVICE

LOCATIONS | **DEVICES**

FLOOR	AREAS		S/D	CABLE	XTNDR	TST CHKD
25	COMM	A	BRK	2	174	✓
	ELECT	A	BRK	2	174	✓
	TELEPH	A	BRK	21	174	✓
	ELECT	B	BRK	2	174	✓
	COMM	B	BRK	2	174	✓
	TELEPH	B	BRK	2	174	✓
	PASS	ELEV.	BRK	2	002	✓
	FREIGHT	ELEV	BRK	2	002	✓
	COMM	C	BRK	2	174	✓
	ELECT	C	BRK	2	174	✓
	TELEPH	C	BRK	2	174	✓
	ELECT	D	BRK	2	174	✓
	COMM	D	BRK	2	174	✓
	TELEPH	D	BRK	2	174	✓
	RETURN D/D	NORTH	Hotlink	2	232	✓
	RETURN D/D	SOUTH	Hotlink	2	232	✓
	CORE HER D/D		Hotlink	2	233	✓
25C	CORE HER D/D		Hotlink	2	233	✓

PREVENTIVE MAINTENANCE CONTRACT

INVOICE TO: T.W.T.C
N.Y.C.

SERVICEMAN ASSIGNED: J. TORRES / F. ROSARIO
SEE AT JOB SITE: F.S.D.
DATE SCHEDULED: 2-22-00
CONTRACT #: S/C00818
TYPE OF SYSTEM: 8500
FEE SERVICE #:
P.O. #:
CALL AUHTORIZED BY:
PHONE:
EXT:

☒ MAINTENANCE ☒ TEST
☐ JOB COMPLETE ☐ JOB INCOMPLETE
☐ SYSTEM ON LINE ☐ SYSTEM OFF LINE

DEPARTED SHOP	TIME IN	TIME OUT	RETURNED SHOP	TOTAL HOURS
AM PM	800 AM PM	430 PM	AM PM	

MATERIAL RECORD

QUANTITY	DESCRIPTION	COST

CUSTOMER NAME (PRINT):
CUSTOMER SIGNATURE:
SERVICEMAN SIGNATURE: J. Torres / F. Rosario

AUTHORIZATION FOR FIRE ALARM INTERRUPTION
The undersigned has been advised by Fire Service Inc. representative that it may be necessary to interrupt the fire protection service by disconnecting the system and/or a component as the performance of their assigned work.
The undersigned hereby assumes the responsibility for the notification of the authorities at the time the servicemen is released and will take all of the precautions deemed necessary during the period of interruption and hold harmless Fire Service Inc. and its employees regarding interruption of the protection service during their service of the equipment.

NAME DATE TIME

SERVICE PERFORMED & REMAINING: STARTED YEAR 2000 / FIRST FLOOR CLEANING / TESTING OF SMOKE DETECTORS WITH IN AREA CLOSEST TO ELEC LOBBIES / TRANSFORMERS - HEAT - DUCTS. - AS LISTED. - CHECK SUBMISSION / ALL OK / BYPASS TOUCHING O.K. - BACK TO NORMAL.

(A) INACCESSIBLE (B) MISSING (C) DEFECTIVE (D) OTHER

FIRE SERVICE INCORPORATED

21926

Subsidiary of Firecom, Inc.
39-27 Fifty Ninth Street
Woodside, New York 11377
(718) 899-2311

REPORT OF FIELD SERVICE

LOCATIONS		DEVICES				
FLOOR		W/STA	CHART	XTNDR	STK PAGE
14	HALLWAY	✓	1	325	✓
	CORE HER	✓	1	325	✓
13					
12	HALLWAY	✓	1	323	✓
	CORE HER	✓	1	323	✓
11	HALLWAY	✓	1	322	✓
	CORE HER	✓	1	322	✓
10	HALLWAY	✓	1	321	✓
	CORE HER	✓	1	321	✓
9	HALLWAY	✓	1	320	✓
	CORE HER	✓	1	320	✓
8	HALLWAY	✓	1	319	✓
	CORE HER	✓	1	319	✓
7	HALLWAY	✓	1	318	✓
	CORE HER	✓	1	318	✓
6	HALLWAY	✓	1	317	✓
6	HER (FAN RM)	✓✓	1	338	✓
6	ENGNRS - RAN II	✓	1	335	●
5	HALLWAY / SERV. ELEV.	✓	1	336	✓
5	SW GEAR H.V.	✓	1	336	✓
5	HER NORTH	✓	1	337	✓
5	" SOUTH	✓	1	337	✓
5	HER N.W	✓	1	316	
4	'B' EXIT / HALL	✓	1	315	✓
3	F.D. OFF RAN I	✓	1	314	●
2	'A' EXIT (AREA)	✓	1	313	✓
2	HER WEST	✓	1	334	✓
2	T/FRAME AREA	✓	1	334	✓
1	PUMP RM	✓	1	341	✓
1	GROUND ENTRANCE	⊘	OUT/SERV.		—

INVOICE TO: W.T.C.
N.Y.C.

SERVICEMAN ASSIGNED: J. LOMEO / F. ROSARIO
SEE AT JOB SITE: F.S.I.
DATE SCHEDULED: 2.18.00
CONTRACT #: S/C 00 818
TYPE OF SYSTEM: 8500
FEE SERVICE #:
P.O. #:
CALL AUHTORIZED BY:
PHONE:
EXT:

☐ MAINTENANCE ☑ TEST
☐ JOB COMPLETE ☐ JOB INCOMPLETE
☐ SYSTEM ON LINE ☐ SYSTEM OFF LINE

DEPARTED SHOP	TIME IN	TIME OUT	RETURNED SHOP	TOTAL HOURS
AM PM	8:00 AM PM	3:30 PM	AM PM	

MATERIAL RECORD

QUANTITY	DESCRIPTION	COST
	PREVENTIVE MAINTENANCE CONTRACT	

CUSTOMER NAME (PRINT): SILVERSTEIN
CUSTOMER SIGNATURE:
SERVICEMAN SIGNATURE:

AUTHORIZATION FOR FIRE ALARM INTERRUPTION
The undersigned has been advised by Fire Service Inc. representatives that it may be necessary to interrupt the fire protection service by disconnecting the system and/or a component in the performance of their assigned work.
The undersigned hereby assumes the responsibility for the notification of the authorities at the time the interruption is initiated and will take all of the precautions deemed necessary during the period of interruption and hold harmless Fire Service Inc. and its employees regarding interruption of fire protection service during their service of the equipment.

NAME DATE TIME

SERVICE PERFORMED & REMAINING: (4) PER CONTRACT CHECK/TESTED FOR OPERATION WALDEN'S HORNS STATIONS + SPKR'S PAGE ON FLOOR 14 TO 1ST FL. (AS LISTED ABOVE). — (4) GROUND FLOOR ENTRANCE UNIT (DISCONNECTED TO GROUNDED WIRING. - (AS PREVIOUSLY INFORMED) UNIT-OUT —

(A) INACCESSIBLE (B) MISSING (C) DEFECTIVE (D) OTHER

FIRE SERVICE INCORPORATED

21925

Subsidiary of Firecom, Inc.
39-27 Fifty Ninth Street
Woodside, New York 11377
(718) 899-2311

REPORT OF FIELD SERVICE

LOCATIONS			DEVICES			
FLOOR			W/SEA	SPKR/PAGE	XMTR#	
25	HALLWAY		✓	✓	282	
	CORE HER		✓		282	
24	HALLWAY		✓	✓	281	
	CORE HER		✓		281	
23	N/A		NO ACCESS.		—	
22	HALLWAY		✓	✓	333	
	CORE HER		✓		333	
21	HALLWAY		✓	✓	332	
	CORE HER		✓		332	
* 20	HALLWAY		✓	✓	331	
	CORE HER.	*	✓		331	
*	LOW AUDIBILITY PHONE. —					
19	HALLWAY		✓	✓	330	
	CORE HER		✓		330	
18	HALLWAY		✓	✓	329	
	CORE HER		✓		329	
17	HALLWAY		✓	✓	328	
	CORE HER		✓		328	
* 16	HALLWAY		✓	✓	327	
	CORE HER	*	✓		327	
	LOW AUDIBILITY PHONE.					
15	HALLWAY		✓	✓	326	
	CORE HER		✓		326	

TO BE CONTINUED.

INVOICE TO: J.W.T.C
N.Y.C.

SERVICEMAN ASSIGNED: J. TORRES / F. PUSATERIO	SEE AT JOB SITE: F.C.S.
CONTRACT #: S/C 00818	DATE SCHEDULED: 2-17-00
FEE SERVICE #	TYPE OF SYSTEM: P500
CALL AUHTORIZED BY	P.O. #
PHONE	EXT

☒ MAINTENANCE ☒ TEST
☒ JOB COMPLETE ☐ JOB INCOMPLETE
☐ SYSTEM ON LINE ☐ SYSTEM OFF LINE

DEPARTED SHOP	TIME IN	TIME OUT	RETURNED SHOP	TOTAL HOURS
800 AM PM	900 AM PM	1120 AM PM	AM PM	

AUTHORIZATION FOR FIRE ALARM INTERRUPTION
The undersigned has been advised by Fire Service Inc representative that it may be necessary to interrupt the fire protection service by disconnecting the system and/or a component in the performance of their assigned work.
The undersigned hereby assumes the responsibility for the notification of the authorities at the time the interruption is initiated and will take all of the precautions deemed necessary during the period of interruption and hold harmless Fire Service Inc. and its employees regarding interruption of fire protection service during the service of the equipment.

NAME _____ DATE _____ TIME _____

MATERIAL RECORD

QUANTITY	DESCRIPTION	COST
	PREVENTIVE MAINTENANCE CONTRACT	

CUSTOMER NAME (PRINT): SILVERSTEIN
CUSTOMER SIGNATURE: [signature]
SERVICEMAN SIGNATURE: [signature]

SERVICE PERFORMED & REMAINING

AS PER CONTRACT - CHECK TEST FOR OPERATIONS ON WARDEN'S STATIONS AND P.A. PAGE ON FLOOR 25 TO 15TH AS LISTED ABOVE FLOORS 20/16 LOW AUDIBILITY ON PHONE CHECK INCREASED. — TO BE CONTINUED.

ALSO AS PER FINDLAY — STARTED REPLACING T.C.'S PHONES AT F.C.STA. — TO DELETE POINTS ON (SOLOMON RISER POINTS). — TO BE CONTINUED. —

(A) INACCESSIBLE (B) MISSING (C) DEFECTIVE (D) OTHER

FIRE SERVICE INCORPORATED

21921

Subsidiary of Firecom, Inc.
39-27 Fifty Ninth Street
Woodside, New York 11377
(718) 899-2311

REPORT OF FIELD SERVICE

LOCATIONS			DEVICES				
FLOOR	EXITS		CABLE	M/STA	TST		
25	A		2	036	✓		
	B		2	037	✓		
24	A		2	034	✓		
	B		2	035	✓		
23	A	ACCESS NEEDED					
	B		4	-	MAYOR'S OFFICE		
22	A		2	070	✓		
	B		2	071	✓		
21	A		-	068	✓		
	B			069	✓		
20	A			066	✓		
	B			067	✓		
19	A			064	✓		
	B			065	✓		
18	A			062	✓		
	B			063	✓		
17	A			060	✓		
	B			061	✓		
16	A			058	✓		
	B			059	✓		
15	A			056	✓		
	B			057	✓		
14	A			054	✓		
	B			055	✓		
13	A			052	✓		
	B			053	✓		
12	A			050	✓		
	B			051	✓		
11	A			048	✓		
	B			049	✓		
10	A			046	✓		
	B			047	✓		

INVOICE TO: J.W.T.C.
N.Y.C.

SERVICEMAN ASSIGNED: J. TORRES, F. ROSARIO
SEE AT JOB SITE: F.S.I.
DATE SCHEDULED: 2-10-00
CONTRACT #: S/C 818
TYPE OF SYSTEM: 850
FEE SERVICE #:
P.O #:
CALL AUHTORIZED BY:
PHONE:
EXT:

☐ MAINTENANCE ☑ TEST
☐ JOB COMPLETE ☐ JOB INCOMPLETE
☐ SYSTEM ON LINE ☐ SYSTEM OFF LINE

DEPARTED SHOP	TIME IN	TIME OUT	RETURNED SHOP	TOTAL HOURS
AM PM	8:00 AM PM	4:30 PM	AM PM	

MATERIAL RECORD

QUANTITY	DESCRIPTION	COST
	PREVENTIVE MAINTENANCE CONTRACT	

CUSTOMER NAME (PRINT): [illegible]
CUSTOMER SIGNATURE: [signature]
SERVICEMAN SIGNATURE: [signature]

AUTHORIZATION FOR FIRE ALARM INTERRUPTION
The undersigned has been advised by Fire Service Inc representative that it may be necessary to interrupt the fire protection service by disconnecting the system and/or a component in the performance of their assigned work.
The undersigned hereby assumes the responsibility for the notification of the authorities at the time the interruption is initiated and will take all of the precautions deemed necessary during the period of interruption and hold harmless Fire Service Inc. and its employees regarding interruption of the protection service during their service of the equipment.

NAME _____ DATE _____ TIME _____

SERVICE PERFORMED & REMAINING: Contract S/C. Check Tested for proper Operation Manual pull Stations (as listed) Floors 25 to 10th. - Panel Recharged / Reset / Output functions O.K. - To be continue. -

(A) INACCESSIBLE (B) MISSING (C) DEFECTIVE (D) OTHER

FIRE SERVICE INCORPORATED

Subsidiary of Firecom, Inc.
39-27 Fifty Ninth Street
Woodside, New York 11377
(718) 899-2311

15721

REPORT OF FIELD SERVICE

LOCATIONS | **DEVICES**

FLOOR	AREA	LOCATION		S/D	CABLE	XMNR	TST/CLEAN
21	PASS	ELEV		BLK	1	020	✓
	FREIGHT	ELEV		BLK	1	020	✓
	COMM	A		BLK	1	204	✓
	ELECT	A		BLK	1	204	✓
	TELEPH	A		BLK	1	204	✓
	ELECT	B		BLK	1	204	✓
	COMM	B		BLK	1	204	✓
	TELEPH	B		BLK	1	204	✓
	ELECT	C		BLK	1	205	✓
	COMM	C		BLK	1	205	✓
	TELEPH	C		BLK	1	205	✓
	COMM	D		BLK	1	205	✓
	ELECT	D		BLK	1	205	✓
	TELEPH	D		BLK	1	205	✓
	CORE	MEZ D/D	(2)	HORIZ	1	264	✓
	RETURN	D/D NORTH		HORIZ	1	263	✓
(A)	RETURN	D/D SOUTH		HORIZ	1	263	LED
20	COMM	A-B	(2)	BLK	1	203	
	ELECT	A-B	(2)	BLK	1	203	
	TELEPH	A-B	(2)	BLK	1	203	
	TELEPH	C-D	(2)	BLK	1	202	
	COMM	C-D	(2)	BLK	1	202	
	ELECT	C-D	(2)	BLK	1	202	
	PASS	ELEV.		BLK	1	019	✓
	FREIGHT	ELEV.		EOL/SS	1	019	
	PLENUM	RETURN	NORTH	HORIZ	1	261	
	PLENUM	D/D RET	SOUTH	HORIZ	1	261	
	PLENUM	D/D RET	EAST	HORIZ	3	045	✓

PREVENTIVE MAINTENANCE CONTRACT

INVOICE TO: 7 W.T.C.
N.Y.C.

SERVICEMAN ASSIGNED: J. Tower / F. Rosario	SEE AT JOB SITE: F.S.I
	DATE SCHEDULED: 2-29-00
CONTRACT #: S/C008/8	TYPE OF SYSTEM: 8400
FEE SERVICE #	P.O #
CALL AUHTORIZED BY	PHONE / EXT

☑ MAINTENANCE ☑ TEST
☑ JOB COMPLETE ☐ JOB INCOMPLETE
☐ SYSTEM ON LINE ☐ SYSTEM OFF LINE

DEPARTED SHOP	TIME IN	TIME OUT	RETURNED SHOP	TOTAL HOURS
AM / PM	800 AM / PM	430 AM / PM	AM / PM	

MATERIAL RECORD

QUANTITY	DESCRIPTION	COST

CUSTOMER NAME (PRINT): SILVERSTEIN
CUSTOMER SIGNATURE: Cunningham
SERVICEMAN SIGNATURE: J. Tower

AUTHORIZATION FOR FIRE ALARM INTERRUPTION
The undersigned has been advised by Fire Service Inc. representative that it may be necessary to interrupt the fire protection service by disconnecting the system and/or a component in the performance of their assigned work.
The undersigned hereby assumes the responsibility for the notification of the authorities at the time the interruption is initiated and will take all of the precautions deemed necessary during this period of interruption and hold harmless Fire Service Inc. and its employees regarding interruption of fire protection service during their service of the equipment.

NAME _____ DATE _____ TIME _____ X _____

SERVICE PERFORMED & REMAINING: Courtesy S/ CONTACT ON SMOKE DETECTION UNITS ON FLOOR 21 & 20 (ABOVE LISTED LOCATIONS) - CLEANED & TESTED. -

(A) NOTE: RETURN DUCT DETECTOR SOUTH SIDE ON 21ST FL. (NEED LED - BROKEN). -
(B) ALSO CHECK / BYPASS FUNCTION ON DUCT S/D RETURN UNIT 20TH FL (CABLE 3 - CORE 045 EAST SIDE. - SYSTEM ALL RESET BACK TO OPERATION

(A) INACCESSIBLE (B) MISSING (C) DEFECTIVE (D) OTHER

FIRE SERVICE INCORPORATED

21919

Subsidiary of Firecom, Inc.
39-27 Fifty Ninth Street
Woodside, New York 11377
(718) 899-2311

REPORT OF FIELD SERVICE

LOCATIONS			DEVICES				
FLOOR	A	B	C		MANUAL STA.	CABLE	XTINGH TEST
35	056	057	195		✓✓	2	✓
34	054	055			✓✓	2	✓
33	053	052			✓✓	2	✓
32	051	050			✓✓	2	✓
31	048	049			✓✓	2	✓
30	046	047			✓✓	2	✓
29	044	045			✓✓	2	✓
28	042	043			✓✓	2	✓
27	040	041			✓✓	2	✓
27	040 → EAST	Corridor			✓	2	✓
26	038	039			✓✓	2	✓
26	038 → EAST	Corridor			✓	2	✓
41ST	'B' EXIT W/STATION 069 N/G - FIELD WIRING OPEN. - FOREST ELECT. NOTIFIED TO RUN WIRING / TO BE TIED ON 42ND FL. - (FLOOR UNDER CONSTRUCTION). -						

INVOICE TO: F.W.T.C.

N.Y.C.

SERVICEMAN ASSIGNED: J. Torres / F. Rosario

SEE AT JOB SITE: F.S.I.

DATE SCHEDULED: 2-2-00

CONTRACT #: S/C00818

TYPE OF SYSTEM: 8500

FEE SERVICE #:

P.O. #: -

CALL AUHTORIZED BY | PHONE | EXT

☑ MAINTENANCE ☑ TEST

☑ JOB COMPLETE ☐ JOB INCOMPLETE

☐ SYSTEM ON LINE ☐ SYSTEM OFF LINE

DEPARTED SHOP	TIME IN	TIME OUT	RETURNED SHOP	TOTAL HOURS
AM PM	800 AM PM	430 AM PM	AM PM	

MATERIAL RECORD

QUANTITY	DESCRIPTION	COST
	PREVENTIVE MAINTENANCE CONTRACT	

CUSTOMER NAME (PRINT): SILVERSTEIN

CUSTOMER SIGNATURE

SERVICEMAN SIGNATURE

AUTHORIZATION FOR FIRE ALARM INTERRUPTION
The undersigned has been advised by Fire Service Inc. representative that it may be necessary to interrupt the fire protection service by disconnecting the system and/or a component as the performance of their assigned work.
The undersigned hereby assumes the responsibility for the notification of the authorities at the time the interruption is initiated and will take all of the precautions deemed necessary during the period of interruption and hold harmless Fire Service Inc. and its employees regarding interruption of the protection service during their service of the equipment.

NAME DATE TIME

SERVICE PERFORMED & REMAINING: Continued Stationary Check / Testing Manual pull Stations Alarm / Activation on Floors (above Listed). - NOTE: 41ST FL 'B' EXIT UNIT Removed / Wiring Out / Floor Under Construction. - Forest Electric Notified Unit to be Restored Required on Location. -

(A) INACCESSIBLE (B) MISSING (C) DEFECTIVE (D) OTHER

FIRE SERVICE INCORPORATED

21918

Subsidiary of Firecom, Inc.
39-27 Fifty Ninth Street
Woodside, New York 11377
(718) 899-2311

REPORT OF FIELD SERVICE

LOCATIONS | **DEVICES**

INVOICE TO: J.W.T.C.
N.Y.C.

FLOOR	EXIT A	EXIT B	EXIT C		CABLE	XTNDR	H/STA
48	147				2	147	✓✓
47	080	081	082		2		✓✓✓
47	FITNESS AREA				2	084	✓✓
46	079	078	—		2		✓✓
45	076	077	—		2		✓✓
44	074	075	—		2		✓✓
43	072	073			2		✓✓
42	071	070	199-4		2		✓✓✓
41	068	069	198-4		2		✓✓✓
40	067	066	197-4		2		✓✓✓
39	065	064	193-4		2		✓✓✓
39	AUDITORIUM EXIT				4	194	✓✓
38	062	063	192-4		2		✓✓✓
37	060	061	145-4		2		✓✓✓
36	058	059	144-4		2		✓✓✓
	⊗ → 058 A EXIT - N/G - Broken s/w.						
	—	—	—				
		TAMPERS			TEST	ok	
46	POWER	153 - 152			✓		
46	"	151 - 150			✓		
46	"	149 - 148			✓		
41 ST	H/STA	069 'B' EXIT WIRING CUT / OPEN					
	FACP	WIRING OPEN / UNIT REMOVED. —					

SERVICEMAN ASSIGNED: J. TORRES, F. ROSARIO
SEE AT JOB SITE: F.S.I.
DATE SCHEDULED: 2-1-00
CONTRACT #: SK00 818
TYPE OF SYSTEM: 8500
FEE SERVICE #:
P.O. #:
CALL AUHTORIZED BY:
PHONE:
EXT:

☒ MAINTENANCE ☒ TEST
☐ JOB COMPLETE ☐ JOB INCOMPLETE
☐ SYSTEM ON LINE ☐ SYSTEM OFF LINE

DEPARTED SHOP	TIME IN	TIME OUT	RETURNED SHOP	TOTAL HOURS
AM PM	8:00 AM PM	4:30 PM	AM PM	

MATERIAL RECORD

QUANTITY	DESCRIPTION	COST
	PREVENTIVE MAINTENANCE CONTRACT	

CUSTOMER NAME (PRINT): SILVERSTEIN
CUSTOMER SIGNATURE:
SERVICEMAN SIGNATURE:

AUTHORIZATION FOR FIRE ALARM INTERRUPTION
The undersigned has been advised by Fire Service Inc representative that it may be necessary to interrupt the fire protection service by disconnecting the system and/or a component in the performance of their assigned work.
The undersigned hereby assumes the responsibility for the notification of the authorities at the time the interruption is restored and will take all of the precautions deemed necessary during the period of interruption and hold [illegible] Fire Service Inc. and its employees regarding interruption of fire protection service during their service of the equipment.

NAME DATE TIME

SERVICE PERFORMED & REMAINING

J. per Partner check testing for proper alarm response operating manual pull stations on floors 48 to 36th as listed locations / cable - xtndrs - codes - amount —
NOTE: 36th fl. 'A' exit unit #058 not operating - broken s/w - must be replaced. — System ok tested. —
Also testing tampers on 41st fl. pump room. —

(A) INACCESSIBLE (B) MISSING (C) DEFECTIVE (D) OTHER

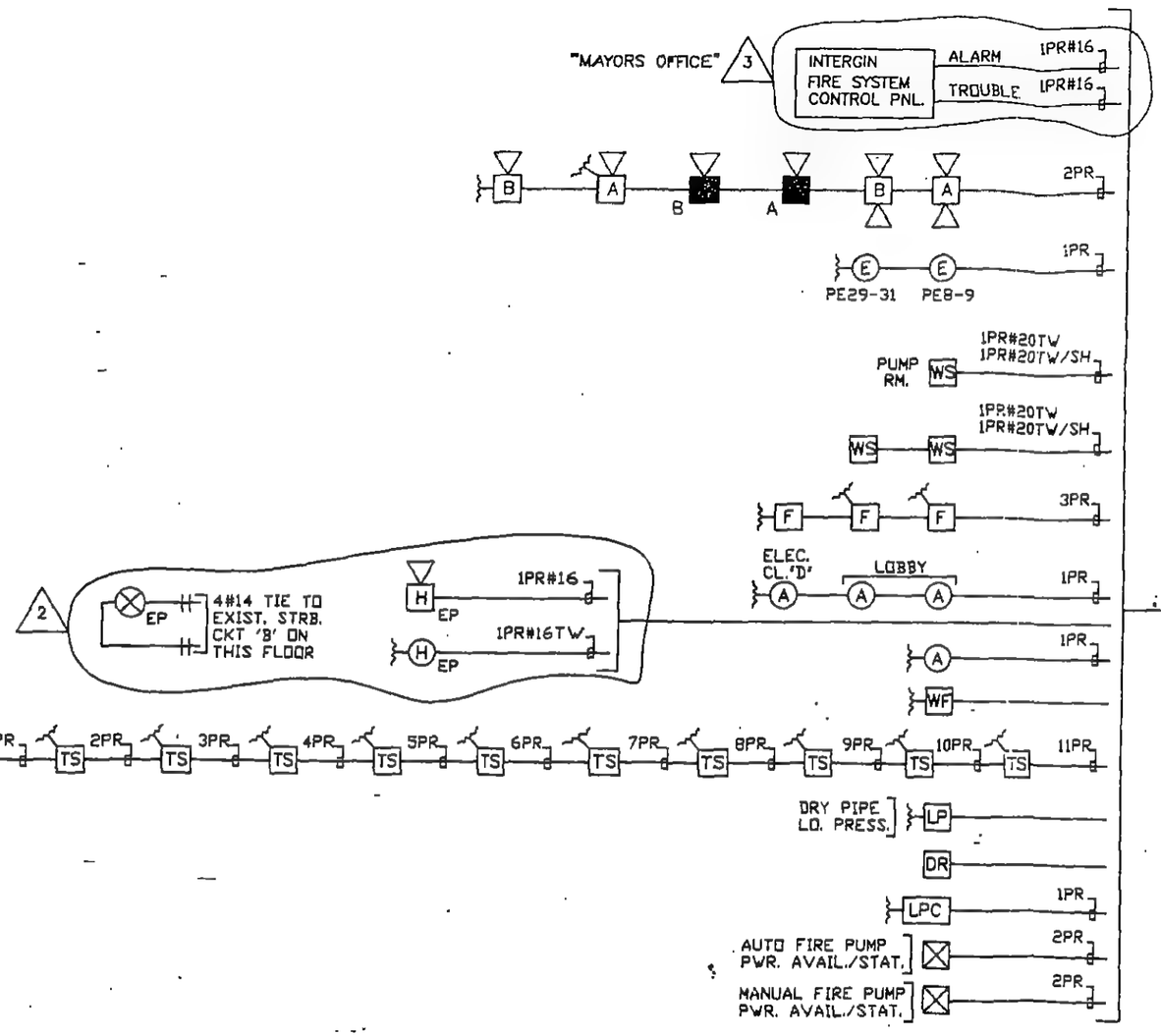

LEGEND

SYMBOL	DESCRIPTION
TTB	TRANSMISSION TERMINAL BOX
	STROBE LIGHT EP = EXPLOSION PROOF
	COMB. SPKR/STROBE
	SPEAKER F = FLUSH
A	AREA SMOKE DETECTOR
E	ELEVATOR LOBBY DETECTOR F = FLUSH
H	HEAT DETECTOR EP = EXPLOSION PROOF
SD	DUCT SMOKE DETECTOR
F/C	FUSE CUT-OUT
	FAN SHUTDOWN
R	RELAY
D	DAMPER
DR	DOOR RELEASE
F	MANUAL STATION
WS	WARDEN STATION
	END OF LINE RESISTOR
	STAIR SPEAKER
WF	WATERFLOW SWITCH
TS	TAMPER SWITCH
	BI-DIRECTIONAL SPEAKER
J	JUNCTION BOX
LPC	LOW PRESSURE COMPRESSURE
LP	LOW PRESSURE SWITCH
H	HORN EP = EXPLOSION PROOF

3	11/10/98	C.S.	ADDED (1) INTERGIN FIRE SYS. CONTROL PANEL ON 1ST FL. FOR 'MAYORS OFFICE' PER FJ-64637-02.
2	9/29/98	C.S.	ADDED (1) HORN, (1) STROBE & (1) HEAT DET. ON 1ST FL. PER FJ-64637.
1	8/25/98	C.S.	RISER REDRAWN. SEE DWG# E-504111-1 FOR REFERENCING PAST REVISIONS.

REV	DATE	BY	DESCRIPTION

OFFICE BUILDING
7 WORLD TRADE CENTER
N.Y.C.

CONTRACTOR | ENGINEER

PARTIAL RISER DIAGRAM
1ST FLOOR

DRN	L.H.
APP'D	
ENGR	C.S.
CKD	
DATE	8/25/98
SCALE	N.T.S.
SHEET	1
OF	2
REV	3

FIRECOM, INC.
CASE/ACME
38-27 STREET
WOODSIDE, NEW YORK 11377

JOB# FJ-26840
DWG# B-504111-01

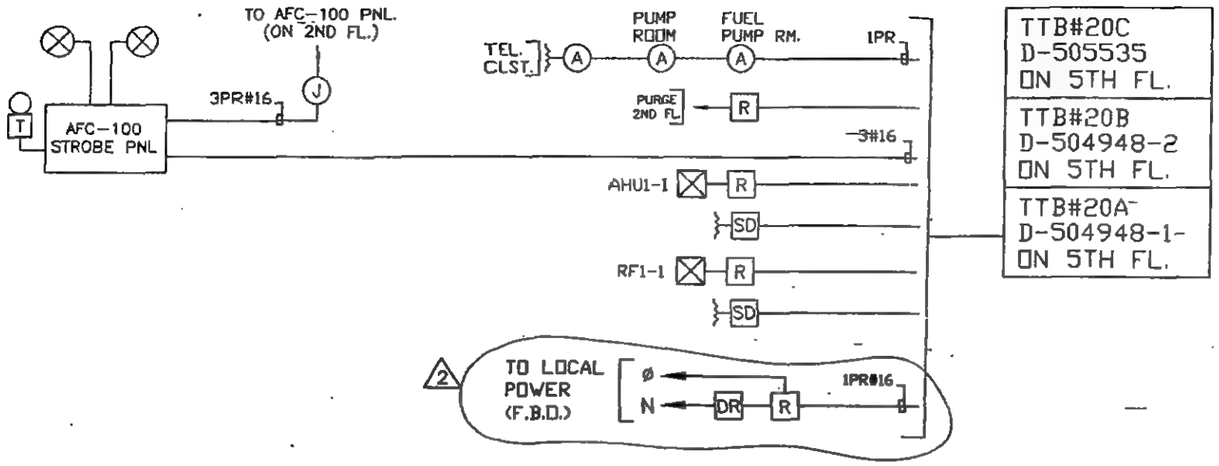

LEGEND	
SYMBOL	DESCRIPTION
TTB	TRANSMISSION TERMINAL BOX
⊗	STROBE LIGHT EP = EXPLOSION PROOF
▷□⊗	COMB. SPKR/STROBE
▷□	SPEAKER F = FLUSH
A	AREA SMOKE DETECTOR
E	ELEVATOR LOBBY DETECTOR F = FLUSH
H	HEAT DETECTOR EP = EXPLOSION PROOF
SD	DUCT SMOKE DETECTOR
F/C	FUSE CUT-OUT
⊠	FAN SHUTDOWN
R	RELAY
D	DAMPER
DR	DOOR RELEASE
F	MANUAL STATION
WS	WARDEN STATION
⏚	END OF LINE RESISTOR
▶□	STAIR SPEAKER
WF	WATERFLOW SWITCH
TS	TAMPER SWITCH
▷□◁	BI-DIRECTIONAL SPEAKER
J	JUNCTION BOX
LPC	LOW PRESSURE COMPRESSURE
LP	LOW PRESSURE SWITCH
▷H	HORN EP = EXPLOSION PROOF

REV	DATE	BY	DESCRIPTION
2	05/04/00	JM	ADDED (1) RELAY FOR DOOR RELEASE ON 1ST FL. PER LJ-80208.
1	8/25/98	CS	RISER REDRAWN. SEE DWG# E-504111-1 FOR REFERENCING PAST REVISIONS.

OFFICE BUILDING
7 WORLD TRADE CENTER
N.Y.C.

CONTRACTOR | ENGINEER

PARTIAL RISER DIAGRAM
1ST FLOOR

FIRECOM, INC.
CASE/ACME
36-17 STREET
WOODSIDE, NEW YORK 11377

DRN	L.H.
APPVD	
ENGR	C.S.
CKD	
DATE	8/25/98
SCALE	N.T.S.
SHEET	2
JOB#	FJ-26840
OF	2
DWG#	B-504111-01
REV	2

1ST FLOOR

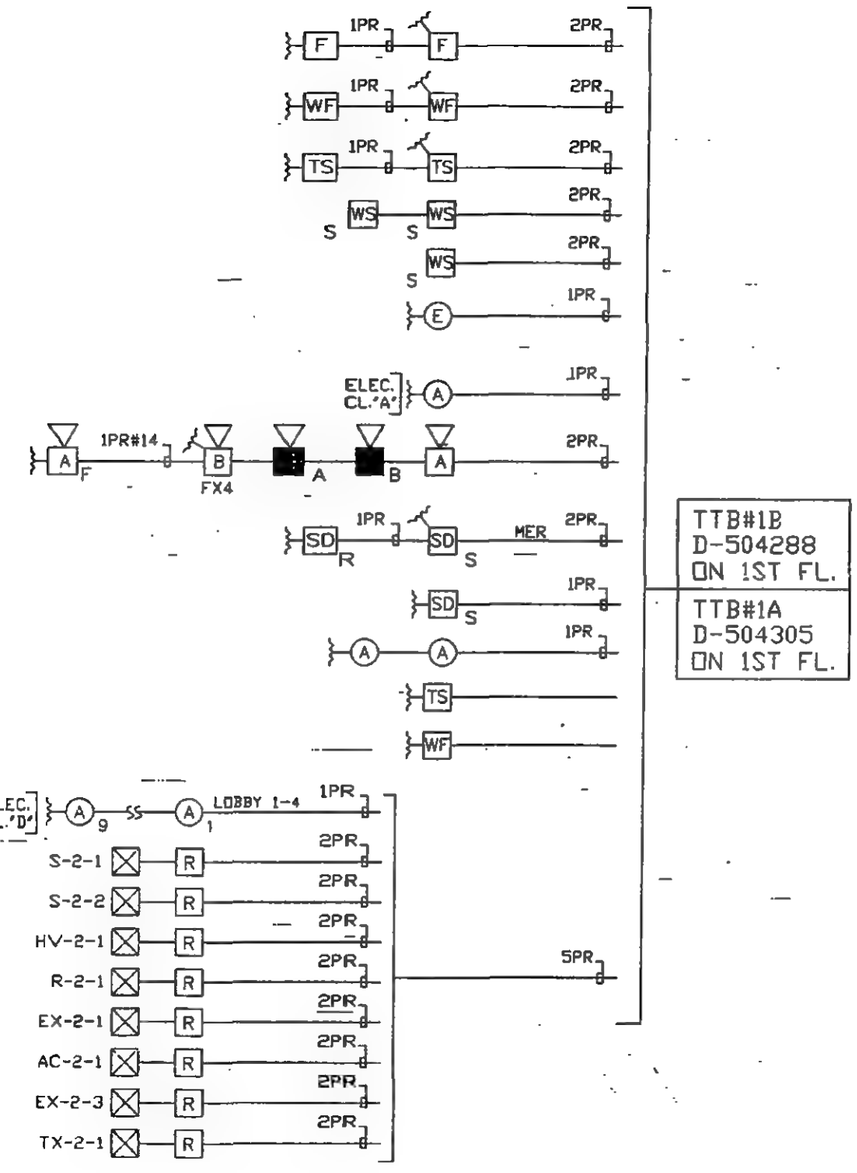

LEGEND

SYMBOL	DESCRIPTION
TTB	TRANSMISSION TERMINAL BOX
⊗	STROBE LIGHT
▷□⊗	COMB. SPKR/STROBE
▷□	SPEAKER F = FLUSH
A	AREA SMOKE DETECTOR
E	ELEVATOR LOBBY DETECTOR F = FLUSH
H	HEAT DETECTOR
SD	DUCT SMOKE DETECTOR S = SUPPLY R = RETURN
F/C	FUSE CUT-OUT
⊠	FAN SHUTDOWN
R	RELAY
D	DAMPER
DR	DOOR RELEASE
F	MANUAL STATION
WS	WARDEN STATION S = SURFACE
⊥	END OF LINE RESISTOR
▶□	STAIR SPEAKER
WF	WATERFLOW SWITCH
TS	TAMPER SWITCH
PH	PHOTO HEAT/SMOKE DETECTOR

REV	DATE	BY	DESCRIPTION
1	05/01/00	JM	RISER REDRAWN. SEE DWG# E-504111-1 FOR REFERENCING PAST REVISIONS.

OFFICE BUILDING
7 WORLD TRADE CENTER
N.Y.C.

CONTRACTOR | ENGINEER

PARTIAL RISER DIAGRAM
2ND FLOOR

FIRECOM, INC.
CASE/ACME
39-27 STREET
WOODSIDE, NEW YORK 11377

DRN	L.H.
APP'D	
ENGR	J.M.
CKD	
DATE	05/01/00
SCALE	N.T.S.
SHEET	1
OF	2
JOB#	FJ-26840
DWG#	E-504111-02
REV	1

2ND FLOOR

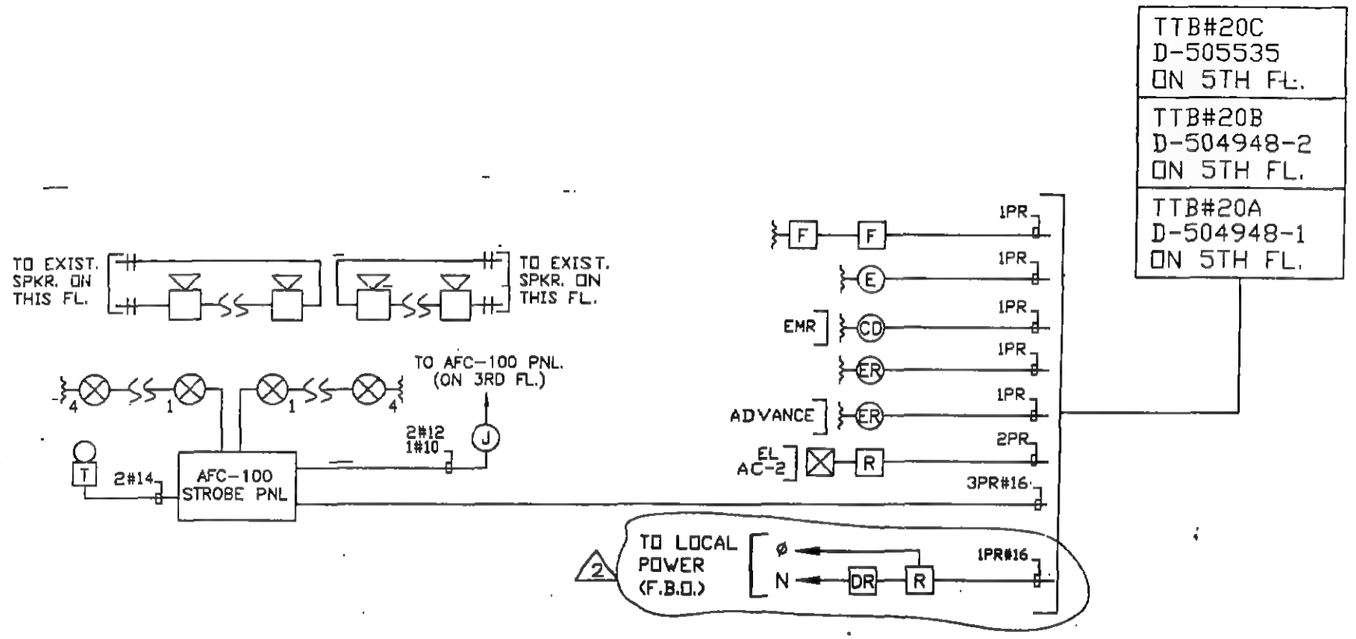

LEGEND	
SYMBOL	DESCRIPTION
TTB	TRANSMISSION TERMINAL BOX
⊗	STROBE LIGHT EP = EXPLOSION PROOF
▷□ ⊗	COMB. SPKR/STROBE
▷□	SPEAKER F = FLUSH
A	AREA SMOKE DETECTOR
E	ELEVATOR LOBBY DETECTOR F = FLUSH
H	HEAT DETECTOR EP = EXPLOSION PROOF
SD	DUCT SMOKE DETECTOR
F/C	FUSE CUT-OUT
⊠	FAN SHUTDOWN
R	RELAY
D	DAMPER
DR	DOOR RELEASE
F	MANUAL STATION
WS	WARDEN STATION
≈	END OF LINE RESISTOR
▶□	STAIR SPEAKER
WF	WATERFLOW SWITCH
TS	TAMPER SWITCH
▷□◁	BI-DIRECTIONAL SPEAKER
J	JUNCTION BOX
ER	ELEVATOR RECALL JUNCTION BOX
CD	COMBINATION SMOKE & HEAT DETECTOR

REV	DATE	BY	DESCRIPTION
2	05/04/00	JM	ADDED (1) RELAY FOR DOOR RELEASE ON 2ND FL. PER LJ-80208.
1	05/02/00	JM	RISER REDRAWN. SEE DWG# E-504111-1 FOR REFERENCING PAST REVISIONS.

OFFICE BUILDING
7 WORLD TRADE CENTER
N.Y.C.

PARTIAL RISER DIAGRAM
2ND FLOOR

DRN	L.H.
APP'D	
ENGR	J.M.
CHD	
DATE	05/02/00
SCALE	N.T.S.
SHEET	2
OF	2
REV	2

CONTRACTOR | ENGINEER

FIRECOM, INC.
CASE/ALARM
38-27 STREET
WOODSIDE, NEW YORK 11377

JOB# FJ-26840
DWG# B-504111-02

2ND FLOOR

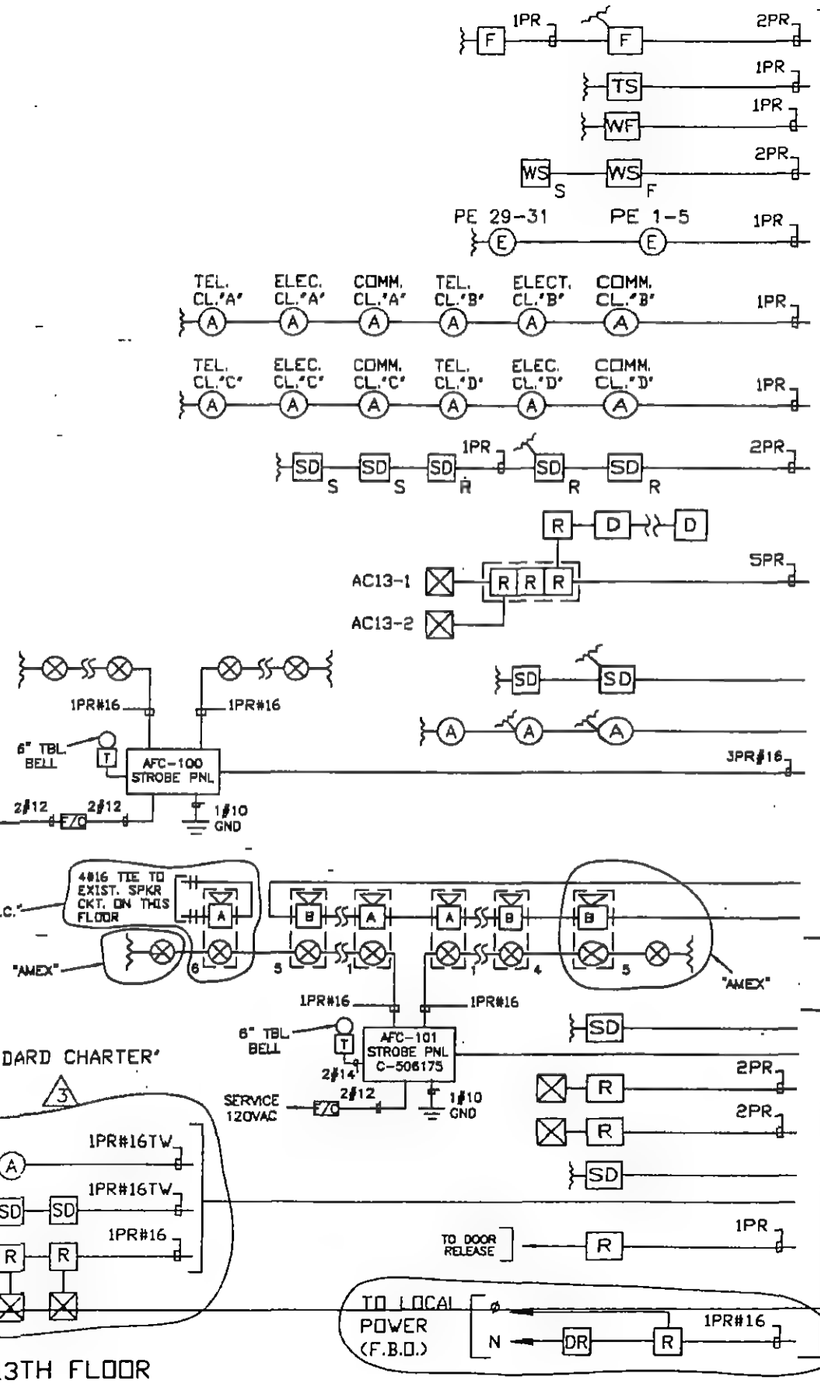

LEGEND

SYMBOL	DESCRIPTION
TTB	TRANSMISSION TERMINAL BOX
⊗	STROBE LIGHT
▷□⊗	COMB. SPKR/STROBE
▷□	SPEAKER
A	AREA SMOKE DETECTOR
E	ELEVATOR LOBBY DETECTOR
H	HEAT DETECTOR
SD	DUCT SMOKE DETECTOR — S = SUPPLY, R = RETURN
F/C	FUSE CUT-OUT
⊠	FAN SHUTDOWN
R	RELAY
D	DAMPER
DR	DOOR RELEASE
F	MANUAL STATION
WS	WARDEN STATION — S = SURFACE, F = FLUSH
⊥	END OF LINE RESISTOR
▶□	STAIR SPEAKER
WF	WATERFLOW SWITCH
TS	TAMPER SWITCH

4	10/10/00	JM	ADDED (5) SPKR./STRBS. FOR 'STANDARD CHARTER' PER LJ-80452.
3	8/30/99	CS	ADDED (2) DUCT SMK. DETS., (2) RELAYS FOR FAN SHUTDOWN & (1) AREA SMK. DET. ON 13TH FL. FOR 'STANDARD CHARTER' PER FJ-65220-01.
2	7/9/99	CS	ADDED (6) SPEAKERS, (5) STROBES & (1) RELAY FOR DOOR RELEASE ON 13TH FL. FOR 'STANDARD CHARTER' PER FJ-65220.
1	7/9/99	CS	RISER REDRAWN. SEE DWG# E-504111-2 SH. 2 FOR REFERENCING PAST REVISIONS.

REV	DATE	BY	DESCRIPTION

OFFICE BUILDING
7 WORLD TRADE CENTER
N.Y.C.

CONTRACTOR | ENGINEER

PARTIAL RISER DIAGRAM
13TH FLOOR

FIRECOM, INC.
CASE/ATLAS
38-27 STREET
WOODSIDE, NEW YORK 11377

DSN	L.H.
APPD	
ENGR	C.S.
CKD	
DATE	7/9/99
SCALE	N.T.S.
SHEET	1
OF	2
JOB#	FJ-26840
DWG#	B-504111-13
REV	4

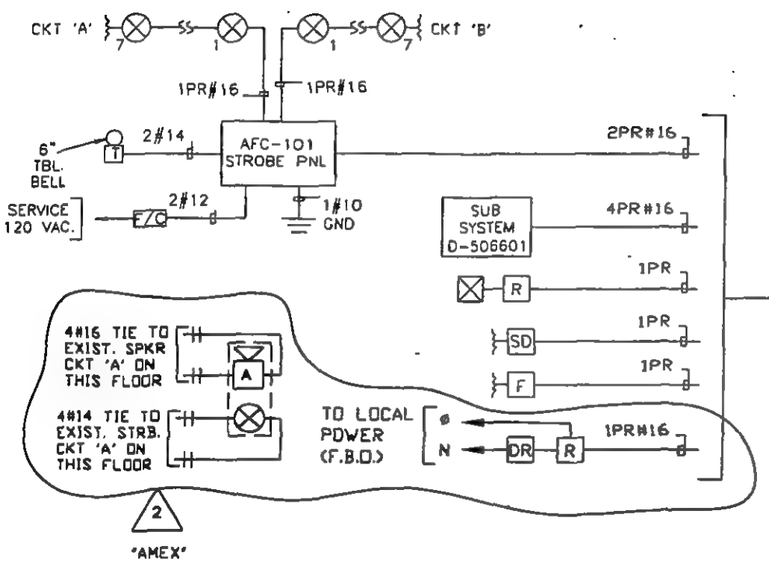

LEGEND	
SYMBOL	DESCRIPTION
TTB	TRANSMISSION TERMINAL BOX
⊗	STROBE LIGHT
▷□⊗	COMB. SPKR/STROBE
▷□	SPEAKER F = FLUSH
(A)	AREA SMOKE DETECTOR
(E)	ELEVATOR LOBBY DETECTOR F = FLUSH
(H)	HEAT DETECTOR
SD	DUCT SMOKE DETECTOR S = SUPPLY R = RETURN
F/C	FUSE CUT-OUT
⊠	FAN SHUTDOWN
R	RELAY
(D)	DAMPER
DR	DOOR RELEASE
F	MANUAL STATION
WS	WARDEN STATION S = SURFACE F = FLUSH
⊣	END OF LINE RESISTOR
▶□	STAIR SPEAKER
WF	WATERFLOW SWITCH
TS	TAMPER SWITCH
PH	PHOTO HEAT/SMOKE DETECTOR

2	9/13/99	C.S.	ADDED (1) SPKR./STRB. & (1) RELAY FOR DOOR RELEASE ON 7TH FL. FOR "AMEX" PER FJ-65298.
1	9/13/99	C.S.	EXT. TTB#22A (D-506284-A) & ASSOCIATED DEVICES TRANFERRED FROM DWG. B-504111-07 SH. #1 TO THIS DWG

REV	DATE	BY	DESCRIPTION

OFFICE BUILDING
7 WORLD TRADE CENTER
N.Y.C.

DRN L.H. | APPVD | ENGR C.S. | CKD | DATE 9/13/99 | SCALE N.T.S. | SHEET 2 | OF 2 | REV 2

CONTRACTOR | ENGINEER

PARTIAL RISER DIAGRAM
7TH FLOOR

FIRECOM, INC.
CASE/ACME
36-27 STREET
WOODSIDE, NEW YORK 11377

JOB# FJ-26840
DWG# B-504111-07

7TH FLOOR

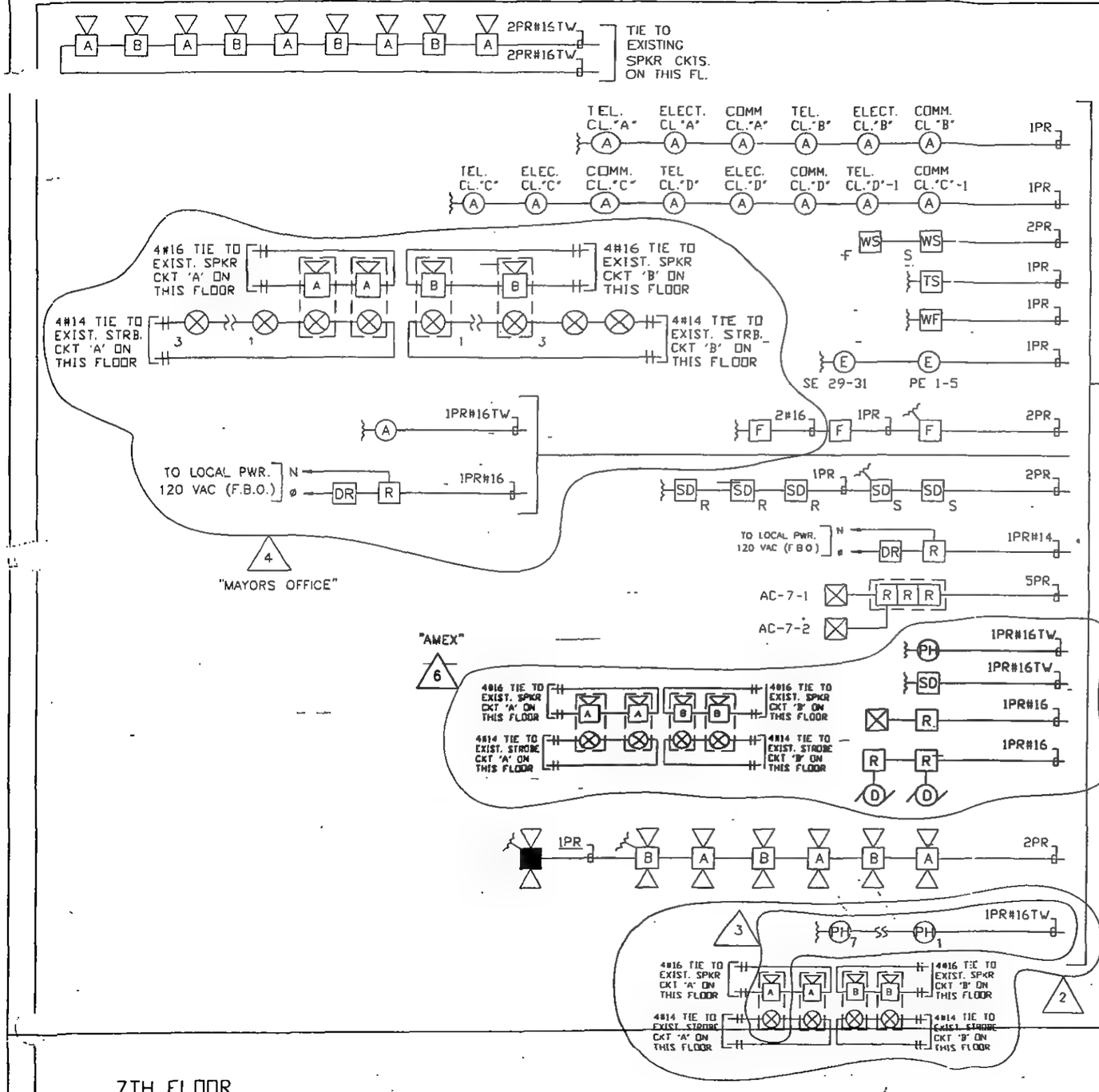

LEGEND

SYMBOL	DESCRIPTION
TTB	TRANSMISSION TERMINAL BOX
	STROBE LIGHT
	COMB. SPKR/STROBE
	SPEAKER F = FLUSH
A	AREA SMOKE DETECTOR
E	ELEVATOR LOBBY DETECTOR F = FLUSH
H	HEAT DETECTOR
SD	DUCT SMOKE DETECTOR S = SUPPLY R = RETURN
F/C	FUSE CUT-OUT
	FAN SHUTDOWN
R	RELAY
D	DAMPER
DR	DOOR RELEASE
F	MANUAL STATION
WS	WARDEN STATION S = SURFACE F = FLUSH
	END OF LINE RESISTOR
	STAIR SPEAKER
WF	WATERFLOW SWITCH
TS	TAMPER SWITCH
PH	PHOTO HEAT/SMOKE DETECTOR

6	11/15/99	C.S.	ADDED (4) SPKR./STRBS., (1) PHOTO HEAT/SMK. DET. (1) DUCT SMK. DET. (1) RELAY FOR FAN SHUTDOWN & (2) RELAYS FOR DAMPER CONTROL ON 7TH FL. FOR "AMEX" PER FJ-65418.
5	9/15/99	C.S.	EXT. TTB #22A (D-506284-A) & ASSOCIATED DEVICES TRANSFERRED FROM THIS DWG. TO DWG #B-504111-07 SH #2
4	1/20/99	C.S.	ADDED (5) SPKR./STRBS. (5) STRBS.,(1) MANUAL-PULL STATION (1) RELAY FOR DOOR RELEASE & (1) AREA SMK. DET. ON 7TH FL. FOR "MAYORS OFFICE" PER FJ-64918.
3	11/21/98	C.S.	REPLACED (2) HEAT DETECTORS WITH (7) PHOTO HEAT/SMK DETS. & ADDED (1) SPKR. STROBE ON 7TH FL. PER FJ-64637.
2	9/9/98	C.S	ADDED (2) HEAT DETS. & (3) SPKR./STRBS ON 7TH FL PER FJ-64637.
1	8/25/98	C.S.	RISER REDRAWN. SEE DWG# E-504111-1 FOR REFERENCING PAST REVISIONS.

REV	DATE	BY	DESCRIPTION

OFFICE BUILDING
7 WORLD TRADE CENTER
N.Y.C.

CONTRACTOR | ENGINEER

PARTIAL RISER DIAGRAM
7TH FLOOR

DRN	L.H.
APPVD	
ENGR	C.S.
CKD	
DATE	8/25/98
SCALE	N.T.S.
SHEET	1
OF	2
REV	6
JOB#	FJ-26840
DWG#	B-504111-07

FIRECOM, INC. CASE/ALME
39-27 STREET WOODSIDE, NEW YORK 11377

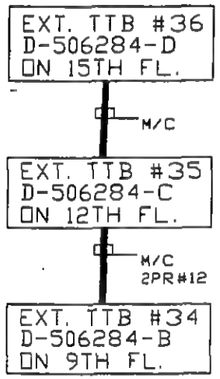

13TH FLOOR

LEGEND

SYMBOL	DESCRIPTION
TTB	TRANSMISSION TERMINAL BOX
⊗	STROBE LIGHT
▷□⊗	COMB. SPKR/STROBE
▷□	SPEAKER F = FLUSH
A	AREA SMOKE DETECTOR
E	ELEVATOR LOBBY DETECTOR
H	HEAT DETECTOR
SD	DUCT SMOKE DETECTOR S = SUPPLY R = RETURN
F/C	FUSE CUT-OUT
⊠	FAN SHUTDOWN
R	RELAY
D	DAMPER
DR	DOOR RELEASE
F	MANUAL STATION
WS	WARDEN STATION S = SURFACE F = FLUSH
⊥	END OF LINE RESISTOR
▶□	STAIR SPEAKER
WF	WATERFLOW SWITCH
TS	TAMPER SWITCH
J	JUNCTION BOX
CD	COMBINATION SMOKE & HEAT DETECTOR

REV	DATE	BY	DESCRIPTION
1	7/7/99	C.S	RISER REDRAWN SEE DWG# E-504111-2 SH. 2 FOR REFERENCING PAST REVISIONS

OFFICE BUILDING
7 WORLD TRADE CENTER
N.Y.C.

CONTRACTOR | ENGINEER

PARTIAL RISER DIAGRAM
13TH FLOOR

FIRECOM, INC.
CASE/ACME
36-27 STREET
WOODSIDE, NEW YORK 11377

DRN	L.H.
APPVD	
ENGR	C.S.
CKD	
DATE	7/9/99
SCALE	N.T.S.
SHEET	2
OF	2
REV	1
JOB#	FJ-26840
ORD#	B-504111-13

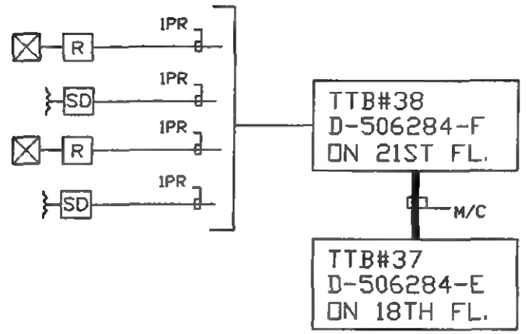

LEGEND	
SYMBOL	DESCRIPTION
TTB	TRANSMISSION TERMINAL BOX
	STROBE LIGHT
	COMB. SPKR/STROBE
	SPEAKER F = FLUSH
A	AREA SMOKE DETECTOR
E	ELEVATOR LOBBY DETECTOR F = FLUSH
H	HEAT DETECTOR
SD	DUCT SMOKE DETECTOR S = SUPPLY R = RETURN
F/C	FUSE CUT-OUT
	FAN SHUTDOWN
R	RELAY
D	DAMPER
DR	DOOR RELEASE
F	MANUAL STATION
WS	WARDEN STATION S = SURFACE F = FLUSH
	END OF LINE RESISTOR
	STAIR SPEAKER
WF	WATERFLOW SWITCH
TS	TAMPER SWITCH
	BI-DIRECTIONAL SPEAKER
SS	SUB-SYSTEM
CD	COMBINATION SMOKE & HEAT DETECTOR
J	JUNCTION BOX

20TH FLOOR

REV	DATE	BY	DESCRIPTION
1	03/02/01	JM	RISER REDRAWN. SEE DWG# E-504111-2 FOR REFERENCING PAST REVISIONS.

OFFICE BUILDING
7 WORLD TRADE CENTER
N.Y.C.

CONTRACTOR | ENGINEER

PARTIAL RISER DIAGRAM
20TH FLOOR
"SALOMON SMITH BARNEY"

FIRECOM, INC.
CASE/ACME
39-27 STREET
WOODSIDE, NEW YORK 11377

DRN	L.H.
APP'VD	
ENGR	J.M.
CKD	
DATE	03/02/01
SCALE	N.T.S.
SHEET	2
OF	2
JOB#	FJ-26840
DWG#	B-504111-20
REV	

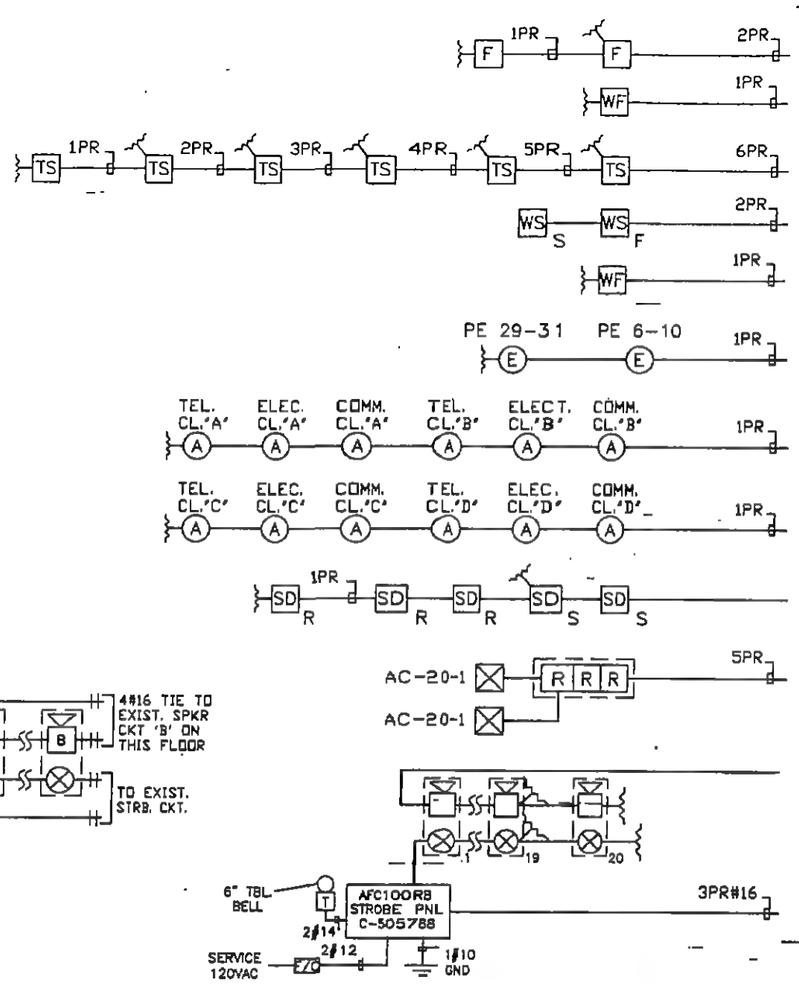

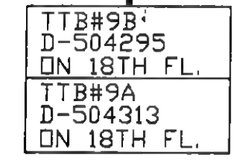

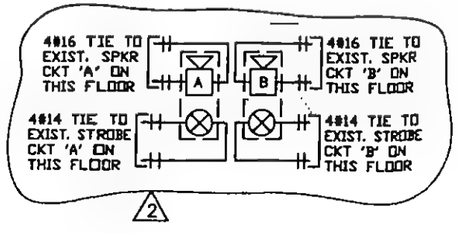

LEGEND	
SYMBOL	DESCRIPTION
TTB	TRANSMISSION TERMINAL BOX
	STROBE LIGHT
	COMBI SPKR/STROBE
	SPEAKER
A	AREA SMOKE DETECTOR
E	ELEVATOR LOBBY DETECTOR
H	HEAT DETECTOR
SD	DUCT SMOKE DETECTOR S = SUPPLY R = RETURN
F/C	FUSE CUT-OUT
	FAN SHUTDOWN
R	RELAY
D	DAMPER
DR	DOOR RELEASE
F	MANUAL STATION
WS	WARDEN STATION S = SURFACE F = FLUSH
	END OF LINE RESISTOR
	STAIR SPEAKER
WF	WATERFLOW SWITCH
TS	TAMPER SWITCH

REV	DATE	BY	DESCRIPTION
2	03/02/01	JM	ADDED (2) SPEAKER/STROBES PER LJ-80656.
1	03/02/01	JM	RISER REDRAWN. SEE DWG# E-504111-2 SH. 2 FOR REFERENCING PAST REVISIONS.

OFFICE BUILDING
7 WORLD TRADE CENTER
N.Y.C.

CONTRACTOR | ENGINEER

PARTIAL RISER DIAGRAM
20TH FLOOR

DRN	L.H.
APPVD	
ENGR	J.M.
CKD	
DATE	03/02/01
SCALE	N.T.S.
SHEET	1
OF	2
REV	2
JOB#	FJ-26840
DWG#	B-504111-20

FIRECOM, INC.
CASE/ACME
36-27 STREET
WOODSIDE, NEW YORK 11377

20TH FLOOR

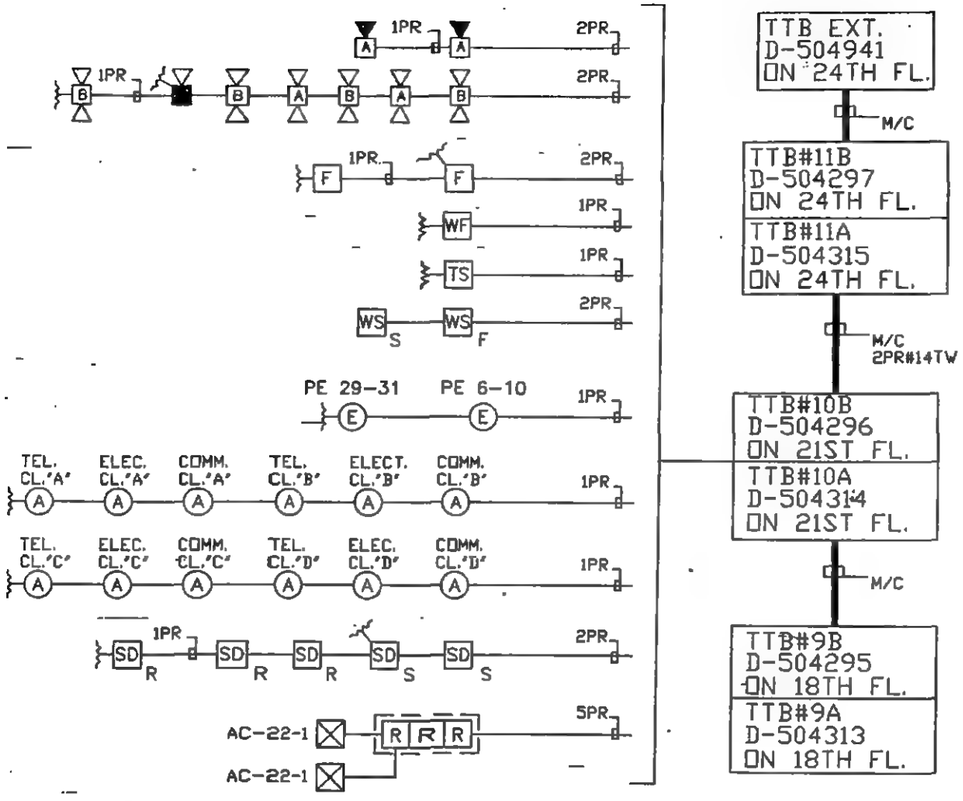

LEGEND	
SYMBOL	DESCRIPTION
TTB	TRANSMISSION TERMINAL BOX
⊗	STROBE LIGHT
▷□⊗	COMBL SPKR/STROBE
▷□	SPEAKER
A	AREA SMOKE DETECTOR
E	ELEVATOR LOBBY DETECTOR
H	HEAT DETECTOR
SD	DUCT SMOKE DETECTOR S = SUPPLY R = RETURN
F/C	FUSE CUT-OUT
⊠	FAN SHUTDOWN
R	RELAY
D	DAMPER
DR	DOOR RELEASE
F	MANUAL STATION
WS	WARDEN STATION S = SURFACE F = FLUSH
	END OF LINE RESISTOR
▶□	STAIR SPEAKER
WF	WATERFLOW SWITCH
TS	TAMPER SWITCH

22ND FLOOR

REV	DATE	BY	DESCRIPTION
1	04/11/01	JM	RISER REDRAWN. SEE DWG# E-504111-2 SH. 3 FOR REFERENCING PAST REVISIONS.

OFFICE BUILDING
7 WORLD TRADE CENTER
N.Y.C.

CONTRACTOR | ENGINEER

PARTIAL RISER DIAGRAM
22ND FLOOR

DRN	L.H.
APPVD	
ENGR	J.M.
CKD	
DATE	04/11/01
SCALE	N.T.S.
SHEET	1
OF	2
REV	1

FIRECOM, INC.
CASE/ALME
38-27 STREET
WOODSIDE, NEW YORK 11377

JOB# FJ-26840
DWG# E-504111-22

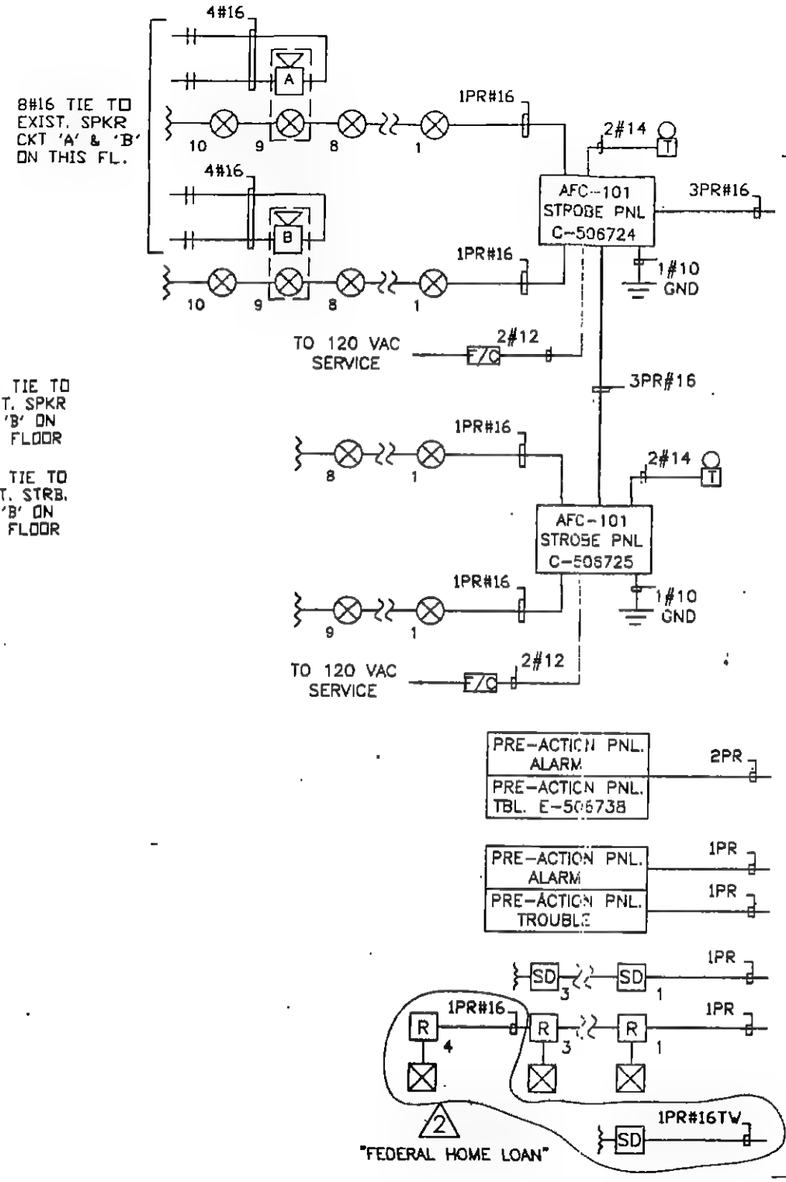

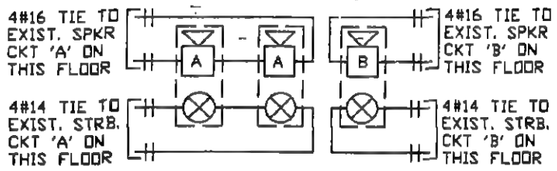

TTB#38
D-506284-F
ON 21ST FL.

M/C

TTB#37
D-506284-E
ON 18TH FL.

LEGEND

SYMBOL	DESCRIPTION
TTB	TRANSMISSION TERMINAL BOX
⊗	STROBE LIGHT
▷□⊗	COMB. SPKR/STROBE
▷□	SPEAKER
A	AREA SMOKE DETECTOR
E	ELEVATOR LOBBY DETECTOR
SD	DUCT SMOKE DETECTOR
F/C	FUSE CUT-OUT
⊠	FAN SHUTDOWN
R	RELAY
D	DAMPER
DR	DOOR RELEASE
F	MANUAL STATION
WS	WARDEN STATION
∿	END OF LINE RESISTOR
▶□	STAIR SPEAKER
WF	WATERFLOW SWITCH
TS	TAMPER SWITCH
J	JUNCTION BOX
CD	COMBINATION SMOKE & HEAT DETECTOR
SS	SUB-SYSTEM

2	04/11/01	JM	ADDED (1) DUCT SMK. DET. & (1) RELAY FOR FAN SHUTDOWN FOR "FEDERAL HOME LOAN" PER LJ-80739.
1	04/11/01	JM	RISER REDRAWN. SEE DWG# E-504111-5 SH. 3 FOR REFERENCING PAST REVISIONS.

REV	DATE	BY	DESCRIPTION

OFFICE BUILDING
7 WORLD TRADE CENTER
N.Y.C.

CONTRACTOR | ENGINEER

PARTIAL RISER DIAGRAM
22ND FLOOR

FIRECOM, INC.
CASE/ALMS
28-12 STREET
ROSEVILLE, NEW YORK 11377

DWN	L.H.
APPVD	
ENGR	J.M.
CKD	
DATE	04/11/01
SCALE	N.T.S.
SHEET	2
OF	2
REV	7
JOB#	FJ-26840
DWG#	B-504111-22

22ND FLOOR

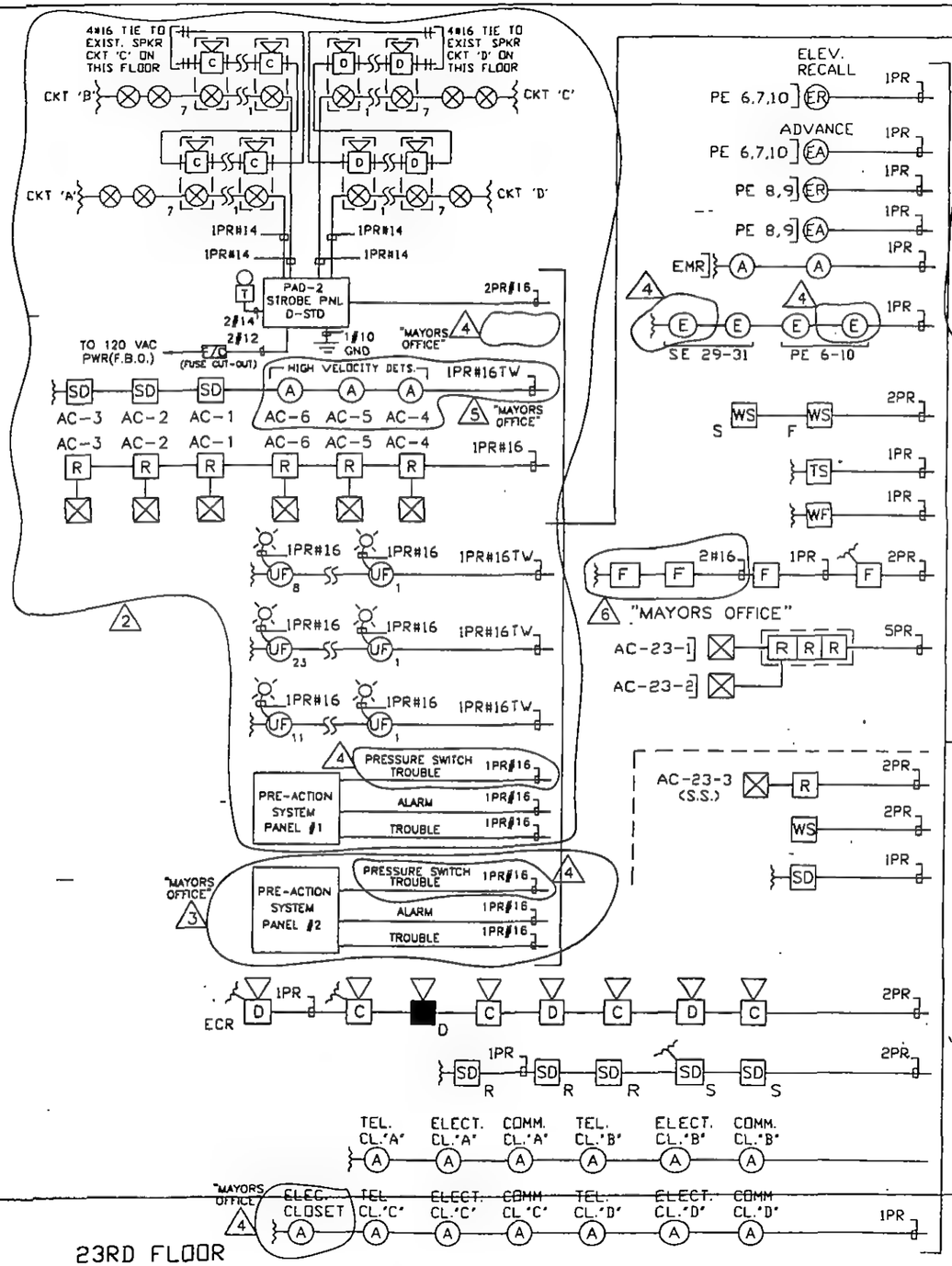

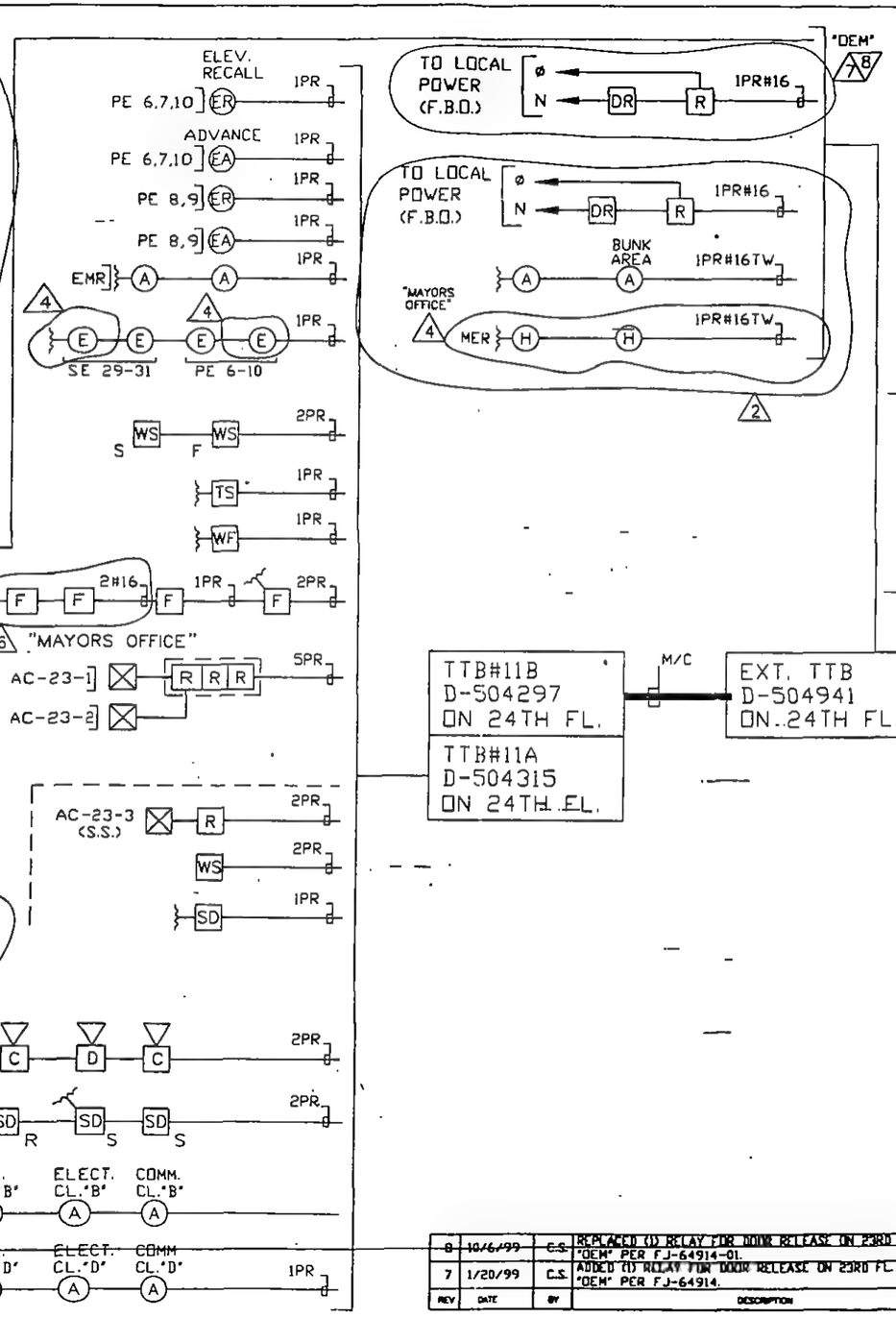

TTB#11B
D-504297
ON 24TH FL.

TTB#11A
D-504315
ON 24TH FL.

M/C

EXT. TTB
D-504941
ON 24TH FL.

REV	DATE	BY	DESCRIPTION
8	10/6/99	C.S.	REPLACED (1) RELAY FOR DOOR RELEASE ON 23RD FL. FOR "OEM" PER FJ-64914-01.
7	1/20/99	C.S.	ADDED (1) RELAY FOR DOOR RELEASE ON 23RD FL. FOR "OEM" PER FJ-64914.

LEGEND

SYMBOL	DESCRIPTION
TTB	TRANSMISSION TERMINAL BOX
	STROBE LIGHT
	COMB. SPKR/STROBE
	SPEAKER F = FLUSH
A	AREA SMOKE DETECTOR
E	ELEVATOR LOBBY DETECTOR. F = FLUSH
H	HEAT DETECTOR
SD	DUCT SMOKE DETECTOR S = SUPPLY R = RETURN
UF	UNDER FLOOR DETECTOR
	FAN SHUTDOWN
R	RELAY
D	DAMPER
DR	DOOR RELEASE
F	MANUAL STATION
WS	WARDEN STATION S = SURFACE F = FLUSH
	END OF LINE RESISTOR
	STAIR SPEAKER
WF	WATERFLOW SWITCH
TS	TAMPER SWITCH
ER	ELEVATOR RECALL JUNCTION BOX
EA	ELEVATOR ADVANCE
	REMOTE INDICATING LAMP

REV	DATE	BY	DESCRIPTION
6	12/28/98	C.S.	ADDED (2) MANUAL PULL STATIONS ON 23RD FL. FOR "MAYORS OFFICE" PER FJ-64899.
5	12/11/98	C.S.	REPLACED (3) DUCT DETS WITH (3) HIGH VELOCITY AREA DETS. PER FJ-64637
4	11/20/98	C.S.	DELETED (1) PRESSURE SWITCH, (2) TAMPER SWITCH & (2) WATER FLOW SWITCH. REPLACED (7) PHOTO HEAT/SMK DETS. WITH (2) HEAT DETS. ADDED (2) ELEV. LOB. DETS. & (1) AREA SMK. DET. ADDED PRESSURE SWITCH (TROUBLE) CONN. TO PRE-ACTION SYSTEMS ON 23RD FL. FOR "MAYORS OFFICE" PER FJ-64637
3	11/10/98	C.S.	ADDED (1) PRE-ACTION SYSTEM ON 23RD FL. FOR "MAYORS OFFICE" PER FJ-64637-02.
2	9/29/98	C.S.	ADDED (1) PAD-2 STRB PNL., (28) SPKR./STROBES., (7) STRBS., (6) DUCT SMK. DETS., (6) RELAYS FOR AC SHUTDOWN, (1) RELAY FOR DOOR RELEASE, (1) PRESSURE SWITCH, (2) TAMPER SWITCH, (2) WATER FLOW SWITCH, (42) UNDER FLOOR DETS., (1) PRE-ACTION SYSTEM, (2) AREA SMK. DETS., (7) PHOTO HEAT/SMK. DETS. & (42) INDICATING LAMPS ON 23RD FLOOR PER FJ-64637
1	8/26/98	C.S.	RISER REDRAWN SEE DWG# E-504111-3 FOR REFERENCING PAST REVISIONS.

OFFICE BUILDING
7 WORLD TRADE CENTER
N.Y.C.

PARTIAL RISER DIAGRAM
23RD FLOOR

DRWN	L.H.
APPVD	
ENGR	C.S.
CKD	
DATE	8/26/98
SCALE	N.T.S.
SHEET	1
OF	1
REV	8
JOB#	FJ-26840
DWG#	E-504111-23

CONTRACTOR | ENGINEER

FIRECOM, INC.
CASE/ACME
39-27 STREET
WOODSIDE, NEW YORK 11377

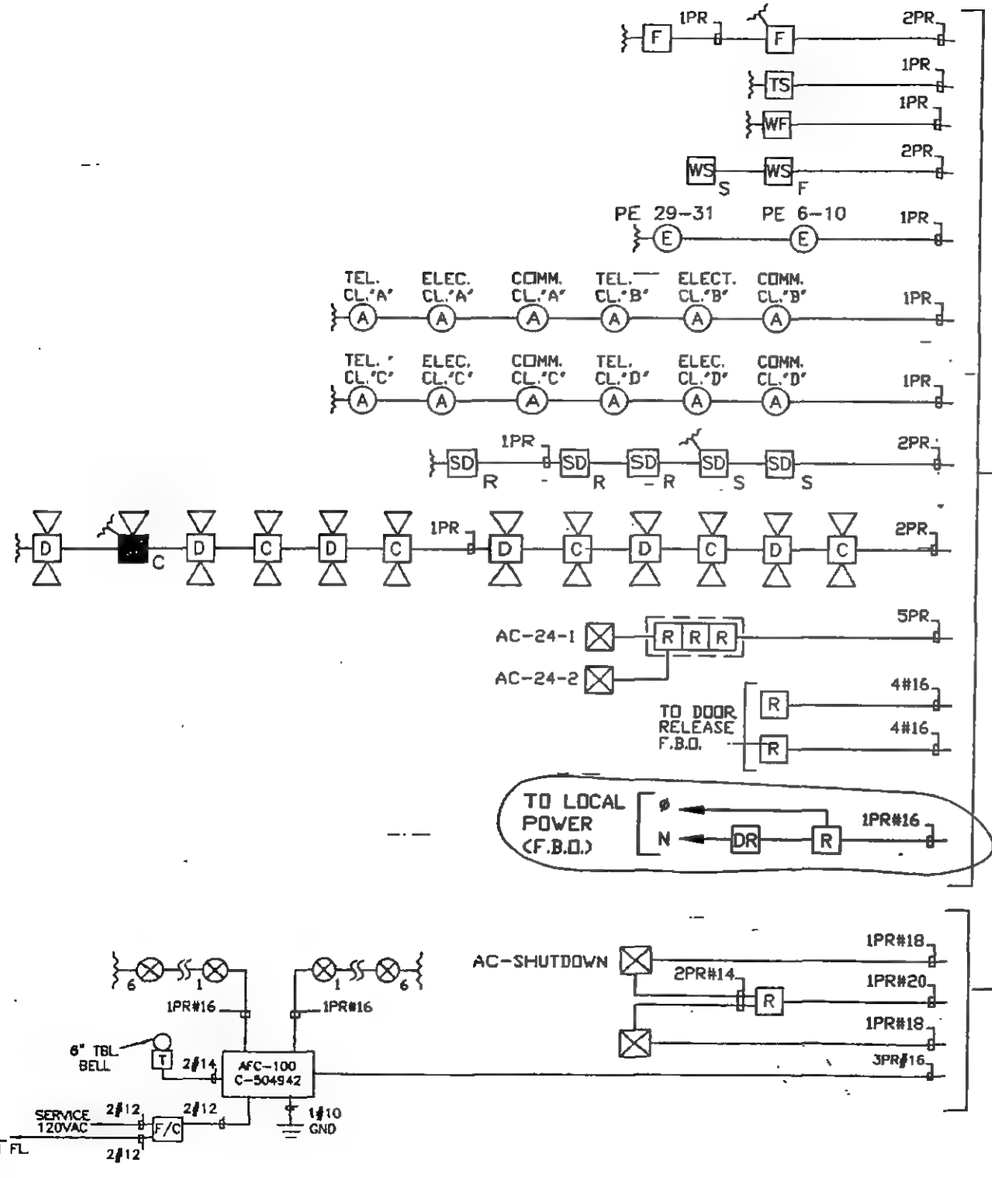

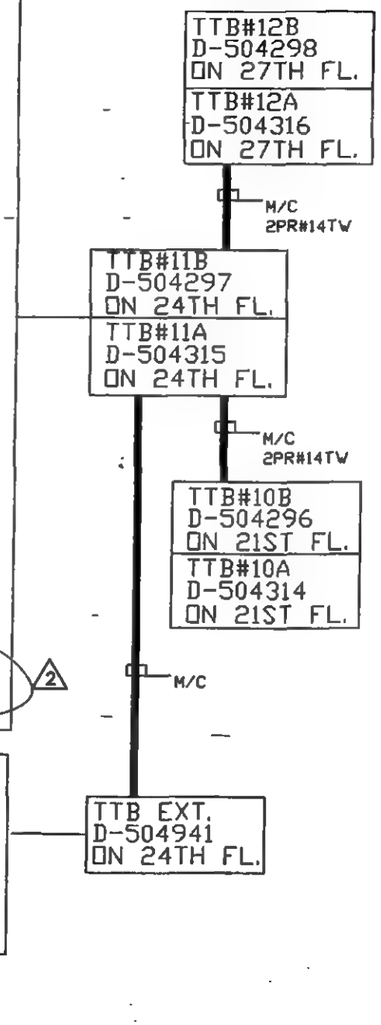

LEGEND

SYMBOL	DESCRIPTION
TTB	TRANSMISSION TERMINAL BOX
⊗	STROBE LIGHT
▷□⊗	COMB. SPKR/STROBE
▷□	SPEAKER
A	AREA SMOKE DETECTOR
E	ELEVATOR LOBBY DETECTOR
H	HEAT DETECTOR
SD	DUCT SMOKE DETECTOR S = SUPPLY R = RETURN
F/C	FUSE CUT-OUT
⊠	FAN SHUTDOWN
R	RELAY
D	DAMPER
DR	DOOR RELEASE
F	MANUAL STATION
WS	WARDEN STATION S = SURFACE F = FLUSH
	END OF LINE RESISTOR
▶□	STAIR SPEAKER
WF	WATERFLOW SWITCH
TS	TAMPER SWITCH
▷□◁	BI-DIRECTIONAL SPEAKER

NO	DATE	BY	DESCRIPTION
2	09/20/00	JM	ADDED (1) RELAY FOR DOOR RELEASE ON 24TH FL PER L.J-80431
1	09/20/00	JM	RISER REDRAWN. SEE DWG# E-504111-2 SH. 2 FOR REFERENCING PAST REVISIONS.

OFFICE BUILDING
7 WORLD TRADE CENTER
N.Y.C.

CONTRACTOR | ENGINEER

PARTIAL RISER DIAGRAM
24TH FLOOR

FIRECOM, INC.
CASE/ACME
28-17 STREET
WOODSIDE, NEW YORK 11377

DRN	L.H.
APPVD	
ENGR	J.M.
CKD	
DATE	09/20/00
SCALE	N.T.S.
SHEET	1
JOB#	FJ-26840
OF	2
DWG#	E-504111-24
REV	2

24TH FLOOR

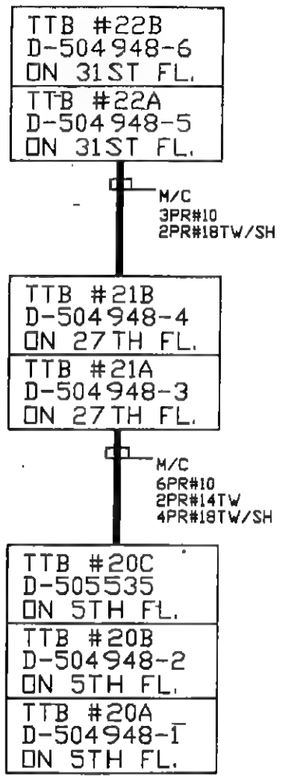

LEGEND

SYMBOL	DESCRIPTION
TTB	TRANSMISSION TERMINAL BOX
⊗	STROBE LIGHT
▷□⊗	COMB. SPKR/STROBE
▷□	SPEAKER F = FLUSH
A	AREA SMOKE DETECTOR
E	ELEVATOR LOBBY DETECTOR
H	HEAT DETECTOR
SD	DUCT SMOKE DETECTOR S = SUPPLY R = RETURN
F/C	FUSE CUT-OUT
⊠	FAN SHUTDOWN
R	RELAY
D	DAMPER
DR	DOOR RELEASE
F	MANUAL STATION
WS	WARDEN STATION S = SURFACE F = FLUSH
≈	END OF LINE RESISTOR
▶□	STAIR SPEAKER
WF	WATERFLOW SWITCH
TS	TAMPER SWITCH
J	JUNCTION BOX
CD	COMBINATION SMOKE & HEAT DETECTOR

24TH FLOOR

REV	DATE	BY	DESCRIPTION
1	09/20/00	JM	RISER REDRAWN. SEE DWG# E-504111-3 SH. 3 FOR REFERENCING PAST REVISIONS.

OFFICE BUILDING
7 WORLD TRADE CENTER
N.Y.C.

CONTRACTOR | ENGINEER

PARTIAL RISER DIAGRAM
24TH FLOOR

DWN	L.H.
APPVD	
ENGR	J.M.
CKD	
DATE	09/20/00
SCALE	N.T.S.
SHEET	2
OF	2
REV	1

FIRECOM, INC.
CASE/ACME
30-27 STREET
WOODSIDE, NEW YORK 11377

JOB# FJ-26840
DWG# B-504111-24

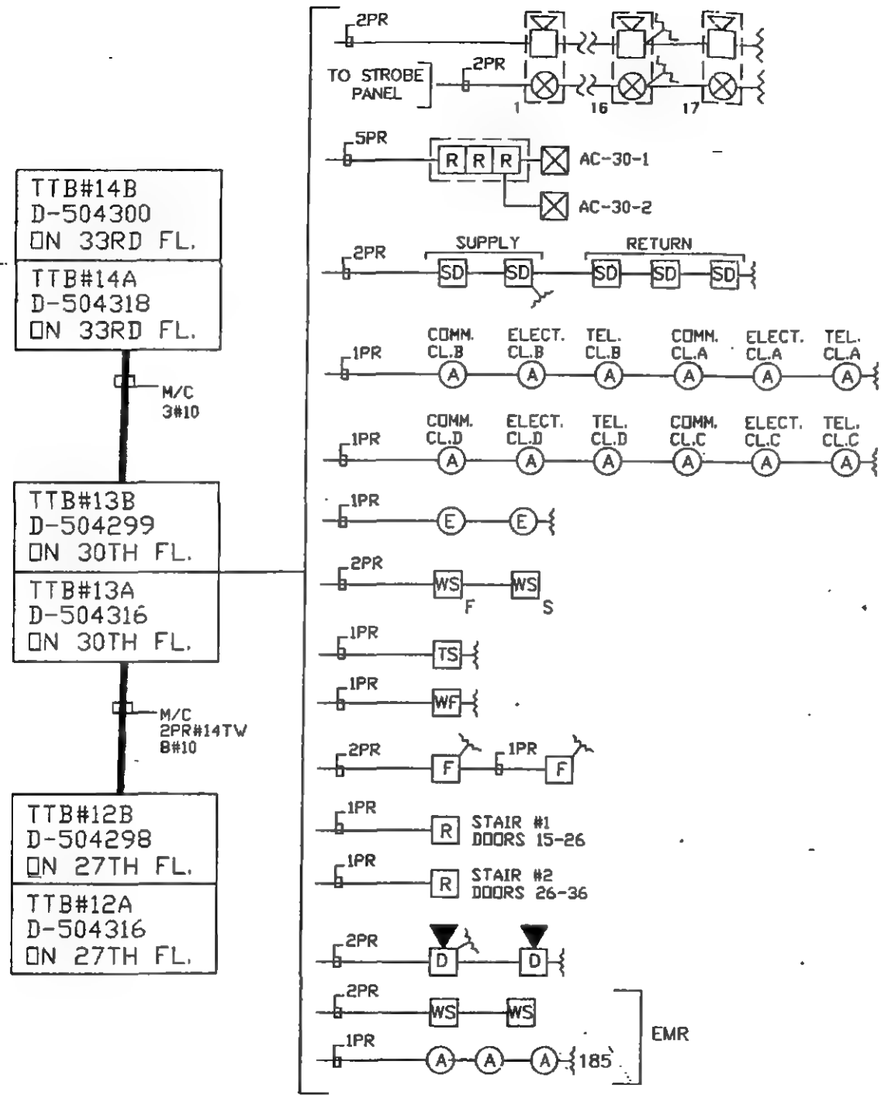

LEGEND	
SYMBOL	DESCRIPTION
TTB	TRANSMISSION TERMINAL BOX
⊗	STROBE LIGHT
▷□⊗	COMB. SPKR/STROBE
▷□	SPEAKER F = FLUSH
(A)	AREA SMOKE DETECTOR
(E)	ELEVATOR LOBBY DETECTOR F = FLUSH
(H)	HEAT DETECTOR
SD	DUCT SMOKE DETECTOR S = SUPPLY R = RETURN
F/C	FUSE CUT-OUT
⊠	FAN SHUTDOWN
R	RELAY
(D)	DAMPER
DR	DOOR RELEASE
F	MANUAL STATION
WS	WARDEN STATION S = SURFACE F = FLUSH
	END OF LINE RESISTOR
▶□	STAIR SPEAKER
WF	WATERFLOW SWITCH
TS	TAMPER SWITCH
▷□◁	BI-DIRECTIONAL SPEAKER
(ER)	ELEVATOR RECALL JUNCTION BOX
(EA)	ELEVATOR ADVANCE

MAY 1 8 2000

REV	DATE	BY	DESCRIPTION
1	05/16/00	JM	RISER REDRAWN. SEE DWG# E-504111-3 FOR REFERENCING PAST REVISIONS

OFFICE BUILDING
7 WORLD TRADE CENTER
N.Y.C.

CONTRACTOR | ENGINEER

PARTIAL RISER DIAGRAM
30TH FLOOR
"SILVERSTEIN"

FIRECOM, INC.
CASE/ACME
38-27 STREET
WOODSIDE, NEW YORK 11377

DRN	L.H.
APPVD	
ENGR	J.M.
CKD	
DATE	05/16/00
SCALE	N.T.S.
SHEET	1
OF	2
JOB#	FJ-26840
DWG#	B-504111-30
REV	1

30TH FLOOR

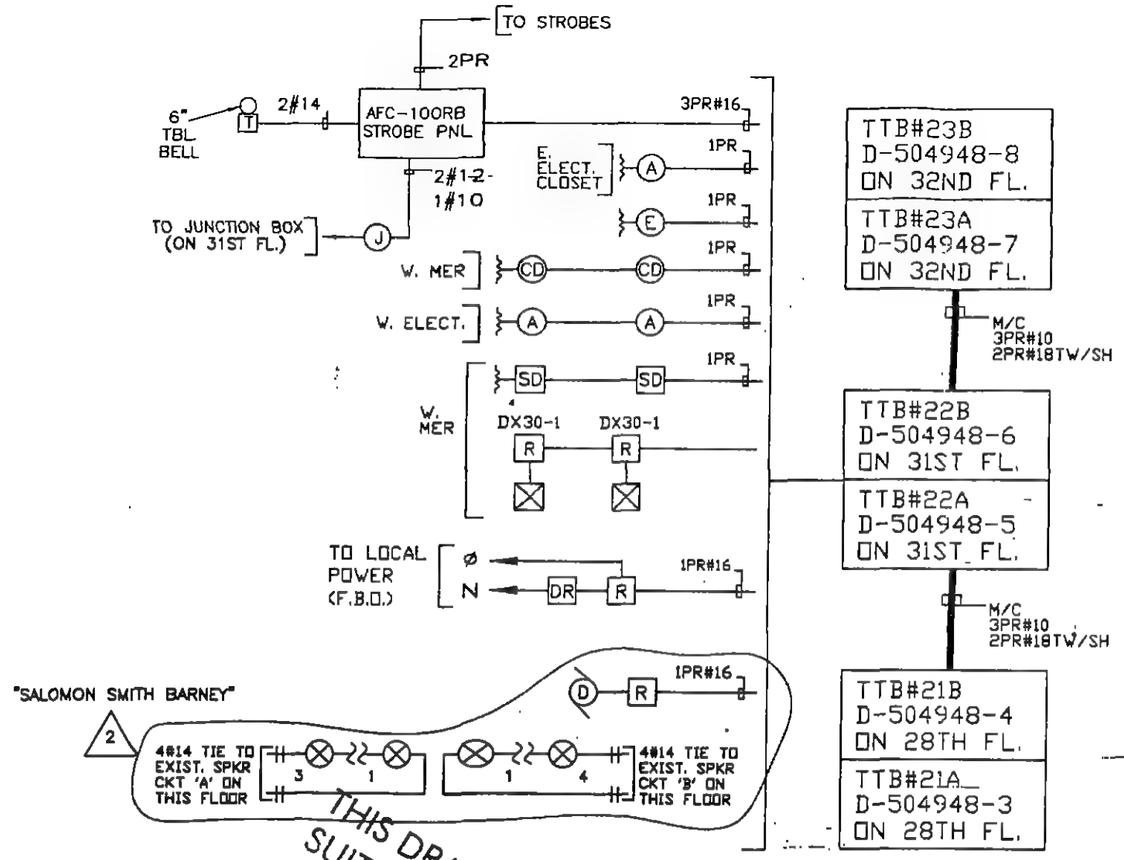

LEGEND	
SYMBOL	DESCRIPTION
TTB	TRANSMISSION TERMINAL BOX
⊗	STROBE LIGHT
▷□⊗	COMB. SPKR/STROBE
▷□	SPEAKER F = FLUSH
A	AREA SMOKE DETECTOR
E	ELEVATOR LOBBY DETECTOR F = FLUSH
H	HEAT DETECTOR
SD	DUCT SMOKE DETECTOR S = SUPPLY R = RETURN
F/C	FUSE CUT-OUT
⊠	FAN SHUTDOWN
R	RELAY
D	DAMPER
DR	DOOR RELEASE
F	MANUAL STATION
WS	WARDEN STATION S = SURFACE F = FLUSH
⏦	END OF LINE RESISTOR
▶□	STAIR SPEAKER
WF	WATERFLOW SWITCH
TS	TAMPER SWITCH
▷□◁	BI-DIRECTIONAL SPEAKER
SS	SUB-SYSTEM
CD	COMBINATION SMOKE & HEAT DETECTOR
J	JUNCTION BOX

THIS DRAWING IS NOT SUITABLE FOR FILING WITH THE NYC FIRE DEPT. OR BUILDING DEPT.

MAY 1 8 2000

THIS DRAWING IS NOT SUITABLE FOR FILING WITH THE NYC FIRE DEPT. OR BUILDING DEPT.

REV	DATE	BY	DESCRIPTION
2	05/16/00	JM	ADDED (1) RELAY DAMPER CONTROL & (6) STROBES. REPLACED (1) EXIST. STRB. WITH (1) NEW STRB. FOR 'SALOMON SMITH BARNEY' PER LJ-80228.
1	05/16/00	JM	RISER REDRAWN. SEE DWG# E-504111-3 FOR REFERENCING PAST REVISIONS.

OFFICE BUILDING
7 WORLD TRADE CENTER
N.Y.C.

PARTIAL RISER DIAGRAM
30TH FLOOR
'SALOMON SMITH BARNEY'

DRN	L.H.
APPVD	
ENGR	J.M.
CKD	
DATE	05/16/00
SCALE	N.T.S.
SHEET	2
OF	2
REV	2

CONTRACTOR | ENGINEER

FIRECOM, INC. CASE/ALME
38-27 STREET
WOODSIDE, NEW YORK 11377

JOB# FJ-26840
DWG# E-504111-30

30TH FLOOR

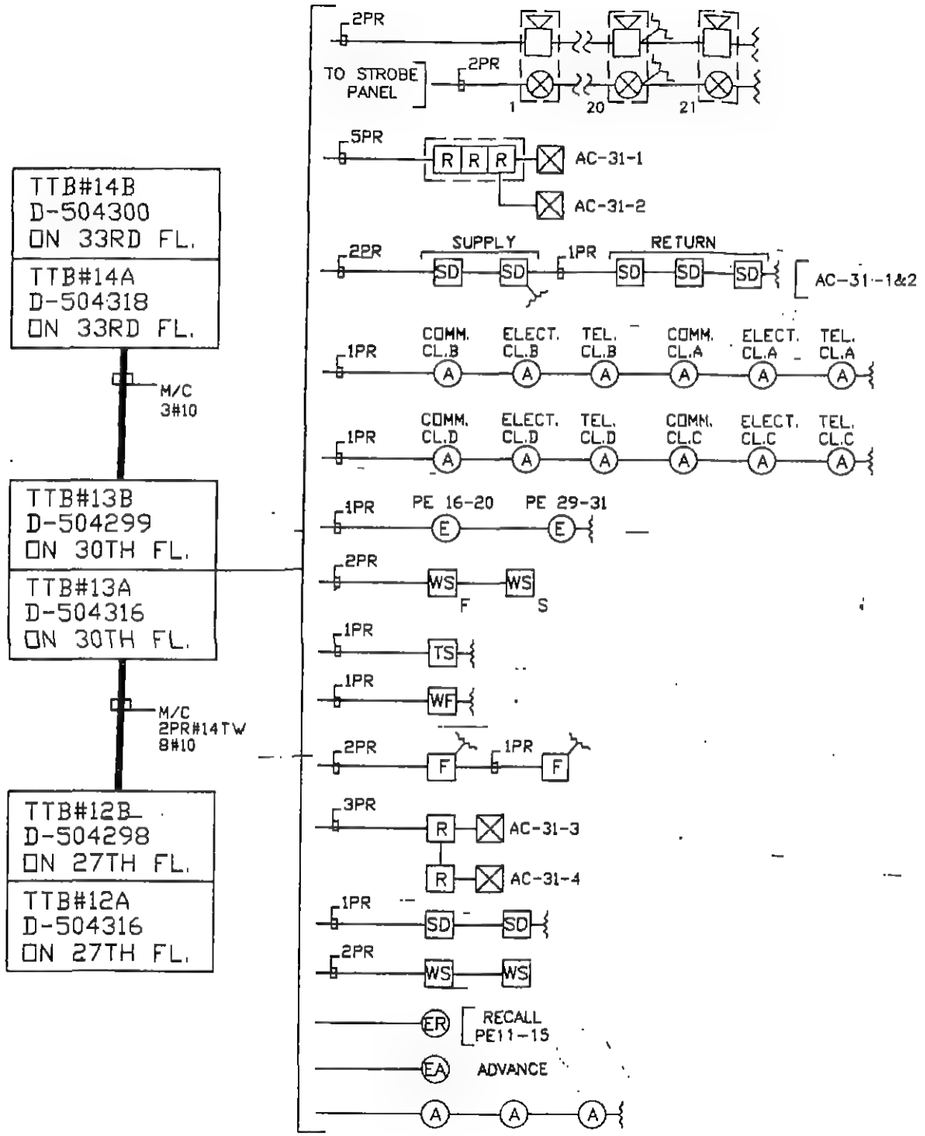

LEGEND	
SYMBOL	DESCRIPTION
TTB	TRANSMISSION TERMINAL BOX
⊗	STROBE LIGHT
▷□⊗	COMB. SPKR/STROBE
▷□	SPEAKER F = FLUSH
A	AREA SMOKE DETECTOR
E	ELEVATOR LOBBY DETECTOR F = FLUSH
H	HEAT DETECTOR
SD	DUCT SMOKE DETECTOR S = SUPPLY R = RETURN
F/C	FUSE CUT-OUT
⊠	FAN SHUTDOWN
R	RELAY
D	DAMPER
DR	DOOR RELEASE
F	MANUAL STATION
WS	WARDEN STATION S = SURFACE F = FLUSH
	END OF LINE RESISTOR
▶□	STAIR SPEAKER
WF	WATERFLOW SWITCH
TS	TAMPER SWITCH
▷□◁	BI-DIRECTIONAL SPEAKER
ER	ELEVATOR RECALL JUNCTION BOX
EA	ELEVATOR ADVANCE

REV	DATE	BY	DESCRIPTION
1	04/26/00	JM	RISER REDRAWN. SEE DWG# E-504111-4 FOR REFERENCING PAST REVISIONS.

OFFICE BUILDING
7 WORLD TRADE CENTER
N.Y.C.

CONTRACTOR | ENGINEER

PARTIAL RISER DIAGRAM
31ST FLOOR
'SILVERSTEIN'

FIRECOM, INC.
CASE/ACME
36-27 STREET
WOODSIDE, NEW YORK 11377

DRN	L.H.
APP'D	
ENGR	J.M.
CKD	
DATE	04/26/00
SCALE	N.T.S.
SHEET	1
OF	2
JOB#	FJ-26840
DWG#	B-504111-31
REV	1

31ST FLOOR

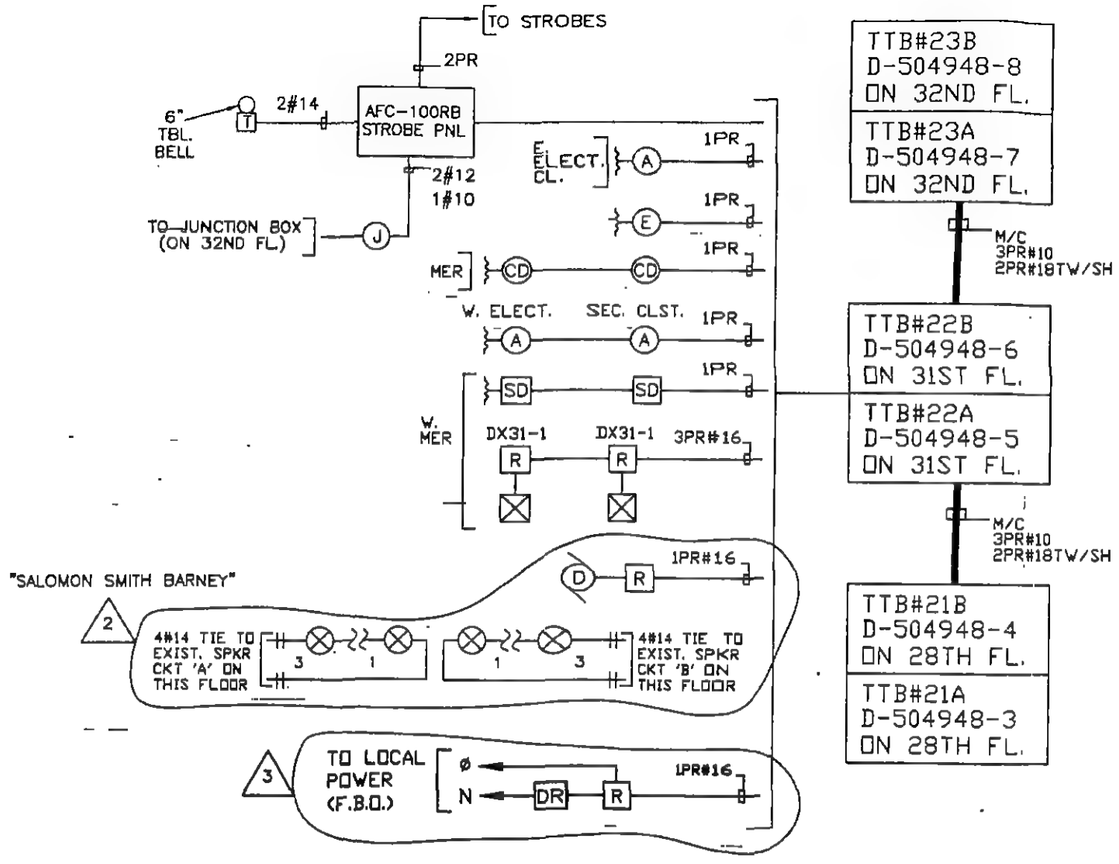

31ST FLOOR

LEGEND

SYMBOL	DESCRIPTION
TTB	TRANSMISSION TERMINAL BOX
	STROBE LIGHT
	COMB. SPKR/STROBE
	SPEAKER F = FLUSH
A	AREA SMOKE DETECTOR
E	ELEVATOR LOBBY DETECTOR F = FLUSH
H	HEAT DETECTOR
SD	DUCT SMOKE DETECTOR S = SUPPLY R = RETURN
F/C	FUSE CUT-OUT
	FAN SHUTDOWN
R	RELAY
D	DAMPER
DR	DOOR RELEASE
F	MANUAL STATION
WS	WARDEN STATION S = SURFACE F = FLUSH
	END OF LINE RESISTOR
	STAIR SPEAKER
WF	WATERFLOW SWITCH
TS	TAMPER SWITCH
	BI-DIRECTIONAL SPEAKER
SS	SUB-SYSTEM
CD	COMBINATION SMOKE & HEAT DETECTOR
J	JUNCTION BOX

3	05/05/00	JM	ADDED (1) RELAY FOR DOOR RELEASE ON 31ST FL. PER LJ-80208.
2	04/26/00	JM	ADDED (6) STROBES & (1) RELAY FOR DAMPER CONTROL FOR "SALOMON SMITH BARNEY" PER LJ-80205.
1	04/26/00	JM	RISER REDRAWN. SEE DWG# F-504111-4 FOR REFERENCING PAST REVISIONS.

REV	DATE	BY	DESCRIPTION

OFFICE BUILDING
7 WORLD TRADE CENTER
N.Y.C.

CONTRACTOR | ENGINEER

PARTIAL RISER DIAGRAM
31ST FLOOR
"SALOMON SMITH BARNEY"

FIRECOM, INC.
CASE/ACME
38-27 STREET
WOODSIDE, NEW YORK 11377

DSN	L.H.
APP'D	
ENGR	J.M.
CKD	
DATE	04/26/00
SCALE	N.T.S.
SHEET	2
OF	2
JOB#	FJ-26840
DWG#	B-504111-31
REV	3

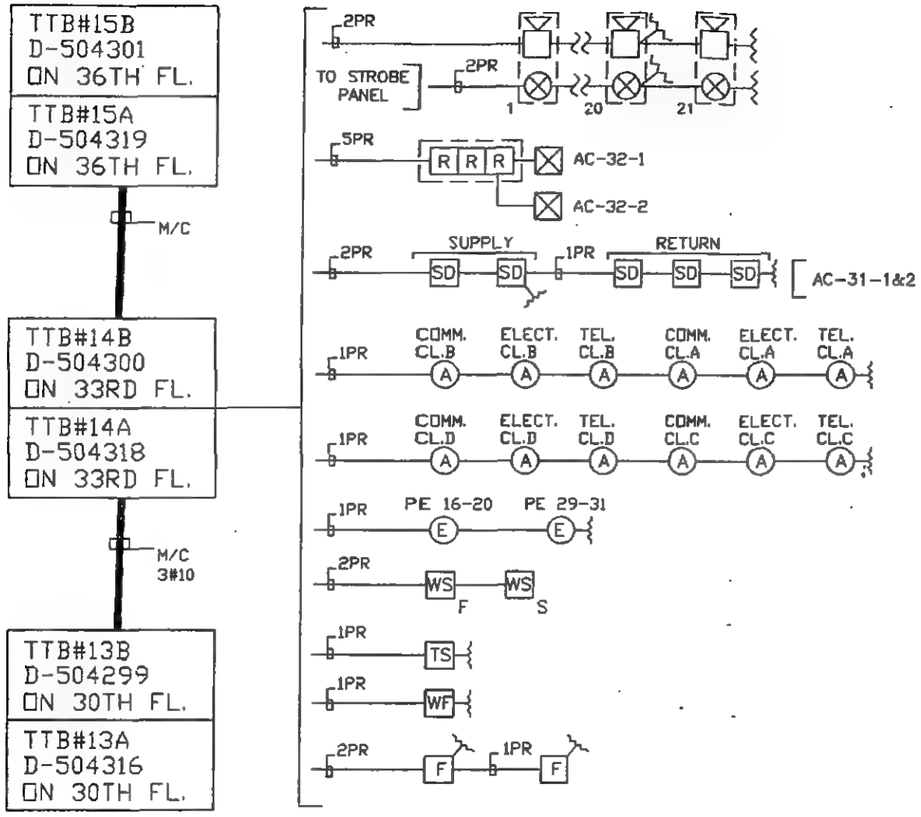

LEGEND	
SYMBOL	DESCRIPTION
TTB	TRANSMISSION TERMINAL BOX
⊗	STROBE LIGHT
▷□⊗	COMB. SPKR/STROBE
▷□	SPEAKER F = FLUSH
A	AREA SMOKE DETECTOR
E	ELEVATOR LOBBY DETECTOR F = FLUSH
H	HEAT DETECTOR
SD	DUCT SMOKE DETECTOR S = SUPPLY R = RETURN
F/C	FUSE CUT-OUT
⊠	FAN SHUTDOWN
R	RELAY
D	DAMPER
DR	DOOR RELEASE
F	MANUAL STATION
WS	WARDEN STATION S = SURFACE F = FLUSH
	END OF LINE RESISTOR
▶□	STAIR SPEAKER
WF	WATERFLOW SWITCH
TS	TAMPER SWITCH
▷-◁	BI-DIRECTIONAL SPEAKER
ER	ELEVATOR RECALL JUNCTION BOX
EA	ELEVATOR ADVANCE

32ND FLOOR

REV	DATE	BY	DESCRIPTION
1	04/26/00	JM	RISER REDRAWN. SEE DWG# E-504111-4 FOR REFERENCING PAST REVISIONS.

OFFICE BUILDING
7 WORLD TRADE CENTER
N.Y.C.

CONTRACTOR | ENGINEER

PARTIAL RISER DIAGRAM
32ND FLOOR
"SILVERSTEIN"

FIRECOM, INC.
CASE/ACME
38-27 STREET
WOODSIDE, NEW YORK 11377

DRN	L.H.
APP'D	
ENGR	J.M.
CKD	
DATE	04/27/00
SCALE	N.T.S.
SHEET	1
OF	2
JOB#	FJ-26840
DWG#	B-504111-32
REV	1

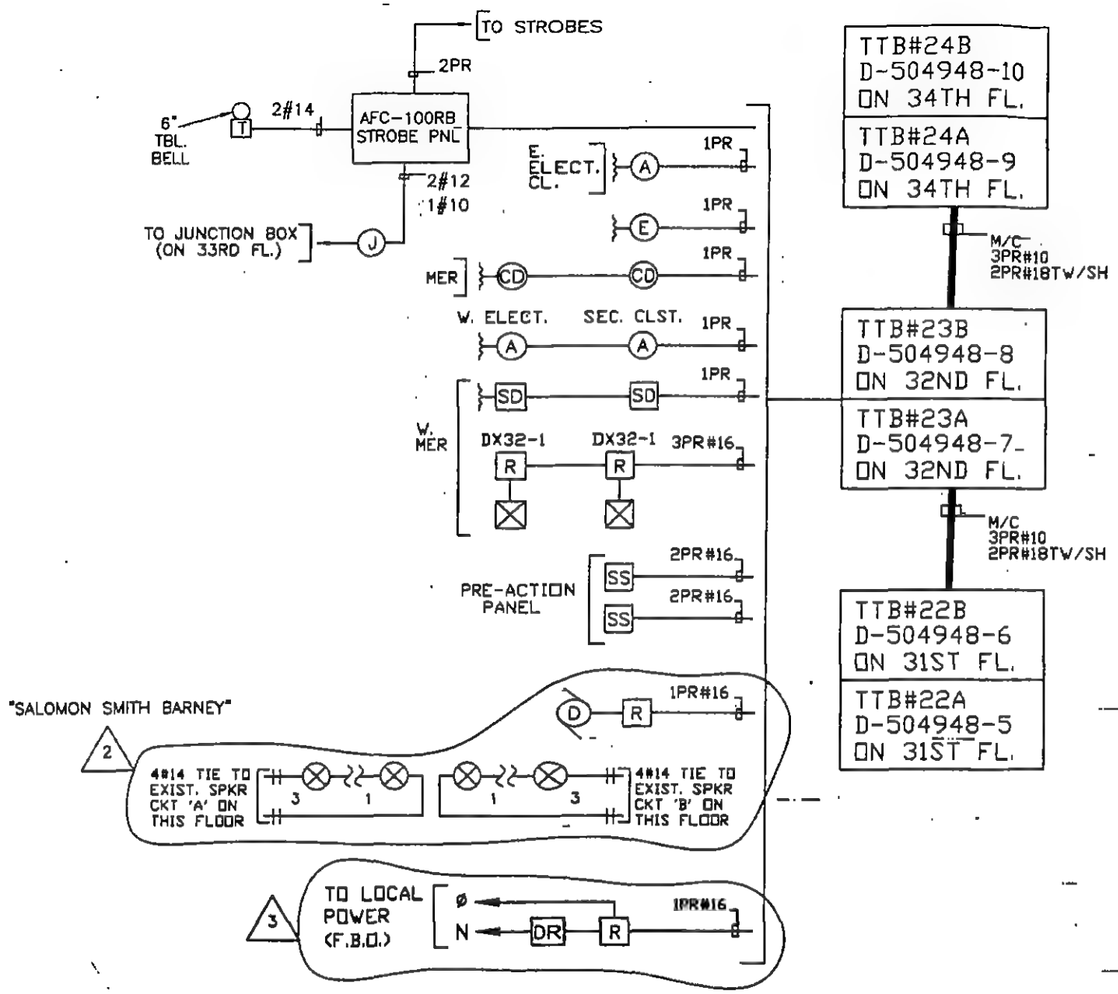

LEGEND

SYMBOL	DESCRIPTION
TTB	TRANSMISSION TERMINAL BOX
	STROBE LIGHT
	COMB. SPKR/STROBE
	SPEAKER F = FLUSH
A	AREA SMOKE DETECTOR
E	ELEVATOR LOBBY DETECTOR F = FLUSH
H	HEAT DETECTOR
SD	DUCT SMOKE DETECTOR S = SUPPLY R = RETURN
F/C	FUSE CUT-OUT
	FAN SHUTDOWN
R	RELAY
D	DAMPER
DR	DOOR RELEASE
F	MANUAL STATION
WS	WARDEN STATION S = SURFACE F = FLUSH
	END OF LINE RESISTOR
	STAIR SPEAKER
WF	WATERFLOW SWITCH
TS	TAMPER SWITCH
	BI-DIRECTIONAL SPEAKER
SS	SUB-SYSTEM
CD	COMBINATION SMOKE & HEAT DETECTOR
J	JUNCTION BOX

REV	DATE	BY	DESCRIPTION
3	05/05/00	JM	ADDED (1) RELAY FOR DOOR RELEASE ON 32ND FL. PER LJ-80208.
2	04/26/00	JM	ADDED (6) STROBES & (1) RELAY FOR DAMPER CONTROL FOR "SALOMON SMITH BARNEY" PER LJ-80204.
1	04/26/00	JM	RISER REDRAWN. SEE DWG# E-504111-4 FOR REFERENCING PAST REVISIONS.

OFFICE BUILDING
7 WORLD TRADE CENTER
N.Y.C.

CONTRACTOR | ENGINEER

PARTIAL RISER DIAGRAM
32ND FLOOR
"SALOMON SMITH BARNEY"

FIRECOM, INC.
CASE/ACME
39-27 STREET
WOODSIDE, NEW YORK 11377

DRN	L.H.
APPRD	
ENGR	J.M.
CKD	
DATE	04/27/00
SCALE	N.T.S.
SHEET	2
OF	2
JOB#	FJ-26840
DWG#	B-504111-32
REV	3

32ND FLOOR

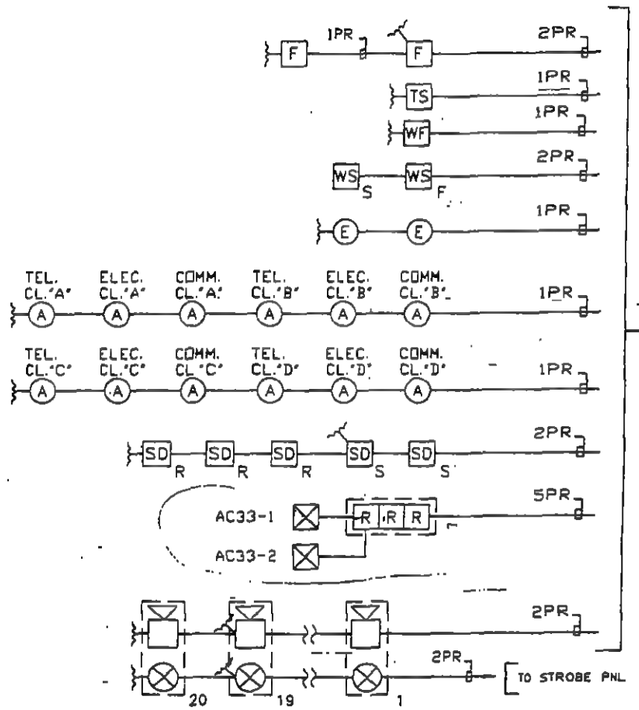

TTB#14B
D-504300
ON THIS FL.

TTB#14A
D-504318
ON THIS FL.

LEGEND

SYMBOL	DESCRIPTION
TTB	TRANSMISSION TERMINAL BOX
⊗	STROBE LIGHT
▷□⊗	COMB. SPKR/STROBE
▷□	SPEAKER F = FLUSH
A	AREA SMOKE DETECTOR
E	ELEVATOR LOBBY DETECTOR
H	HEAT DETECTOR
SD	DUCT SMOKE DETECTOR S = SUPPLY R = RETURN
F/C	FUSE CUT-OUT
⊠	FAN SHUTDOWN
R	RELAY
D	DAMPER
DR	DOOR RELEASE
F	MANUAL STATION
WS	WARDEN STATION S = SURFACE F = FLUSH
	END OF LINE RESISTOR
▶□	STAIR SPEAKER
WF	WATERFLOW SWITCH
TS	TAMPER SWITCH

33RD FLOOR

REV	DATE	BY	DESCRIPTION
1	9/13/99	C.S.	RISER REDRAWN.. SEE DWG# E-504111-4 SH. 4 FOR REFERENCING PAST REVISIONS

OFFICE BUILDING
7 WORLD TRADE CENTER
N.Y.C.

CONTRACTOR | ENGINEER

PARTIAL RISER DIAGRAM
33RD FLOOR

FIRECOM, INC.
CASE/ACME
36-37 STREET
WOODSIDE, NEW YORK 11377

DRAWN	L.H.
APPROVED	
ENGR	C.S.
CHKD	
DATE	9/13/99
SCALE	N.T.S.
SHEET	1
OF	2
REV	1
JOB#	FJ-26840
DWG#	E-504111-33

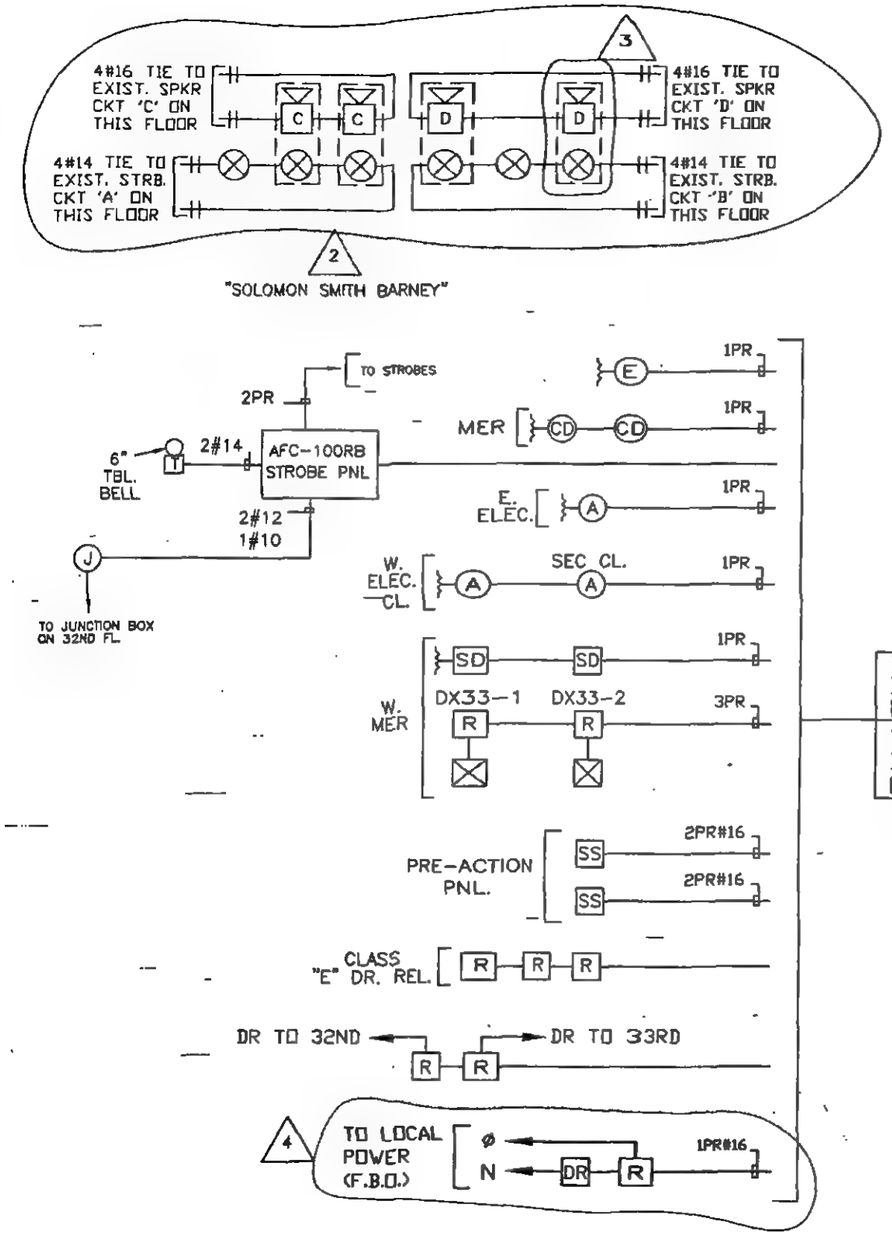

LEGEND

SYMBOL	DESCRIPTION
TTB	TRANSMISSION TERMINAL BOX
⊗	STROBE LIGHT
▷□⊗	COMB. SPKR/STROBE
▷□	SPEAKER
A	AREA SMOKE DETECTOR
E	ELEVATOR LOBBY DETECTOR
H	HEAT DETECTOR
SD	DUCT SMOKE DETECTOR
F/C	FUSE CUT-OUT
⊠	FAN SHUTDOWN
R	RELAY
D	DAMPER
DR	DOOR RELEASE
F	MANUAL STATION
WS	WARDEN STATION
⏦	END OF LINE RESISTOR
▶□	STAIR SPEAKER
WF	WATERFLOW SWITCH
TS	TAMPER SWITCH
J	JUNCTION BOX
CD	COMBINATION SMOKE & HEAT DETECTOR
SS	SUB-SYSTEM

REV	DATE	BY	DESCRIPTION
4	05/05/00	J.M.	ADDED (1) RELAY FOR DOOR RELEASE ON 33RD FL. PER LJ-80208.
3	12/2/99	J.M.	ADDED (1) SPKR./STRB. ON 33RD FL. FOR "SOLOMON SMITH BARNEY" PER FJ-65307-01.
2	9/13/99	C.S.	ADDED (3) SPKR./STRBS. & (2) STROBES FOR "SOLOMON SMITH BARNEY" PER FJ-65307.
1	9/13/99	C.S.	RISER REDRAWN. SEE DWG# E-504111-4 SH. 4 FOR REFERENCING PAST REVISIONS.

OFFICE BUILDING
7 WORLD TRADE CENTER
N.Y.C.

CONTRACTOR | ENGINEER

PARTIAL RISER DIAGRAM
33RD FLOOR

FIRECOM, INC.
CASE/ACME
38-27 STREET
WOODSIDE, NEW YORK 11377

DRN	L.H.
APPVD	
ENGR	C.S.
CKD	
DATE	9/13/99
SCALE	N.T.S.
SHEET	2
JOB#	FJ-26840
OF	2
DWG#	B-504111-33
REV	4

33RD FLOOR

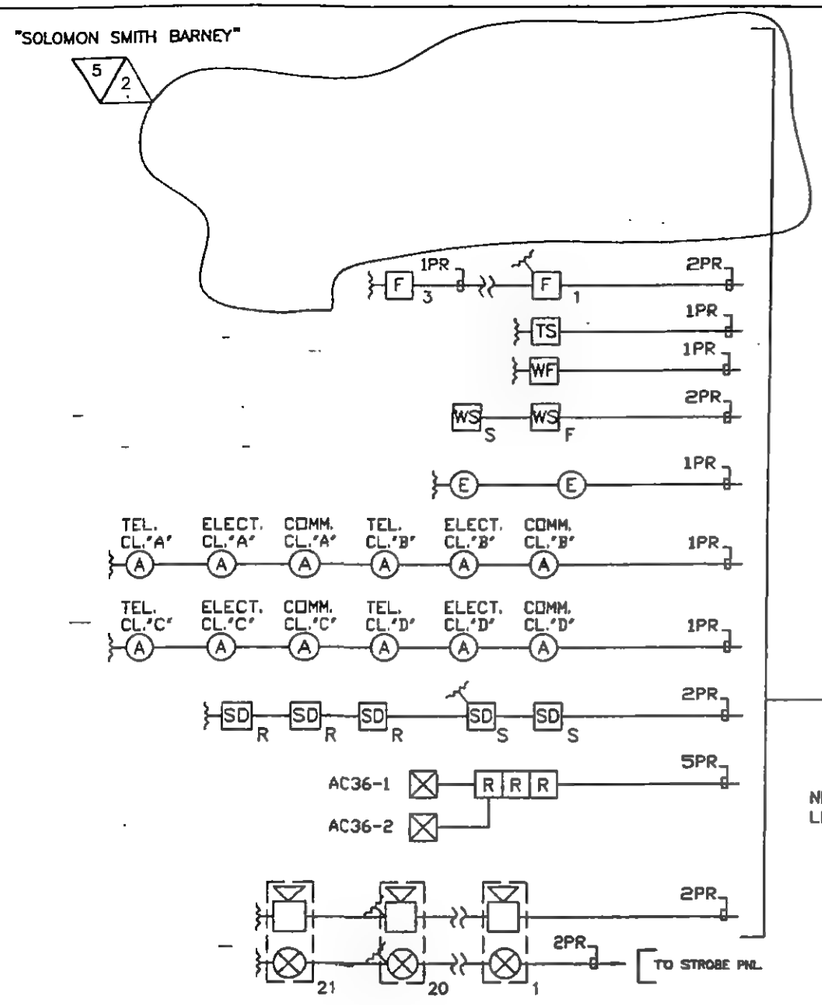

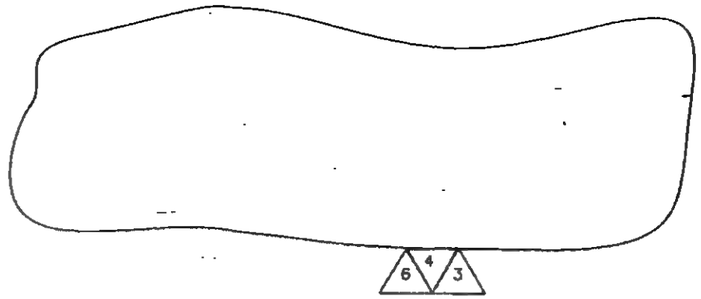

TTB#15B
D-504301
ON 36TH FL.

TTB#15A
D-504319
ON 36TH FL.

NEW
LOCATION

LEGEND	
SYMBOL	DESCRIPTION
TTB	TRANSMISSION TERMINAL BOX
⊗	STROBE LIGHT
▷□⊗	COMB. SPKR/STROBE
▷□	SPEAKER F = FLUSH
A	AREA SMOKE DETECTOR
E	ELEVATOR LOBBY DETECTOR
H	HEAT DETECTOR
SD	DUCT SMOKE DETECTOR S = SUPPLY R = RETURN
F/C	FUSE CUT-OUT
⊠	FAN SHUTDOWN
R	RELAY
D	DAMPER
DR	DOOR RELEASE
F	MANUAL STATION
WS	WARDEN STATION S = SURFACE F = FLUSH
	END OF LINE RESISTOR
▶□	STAIR SPEAKER
WF	WATERFLOW SWITCH
TS	TAMPER SWITCH

REV	DATE	BY	DESCRIPTION
6	06/08/00	JM	TRANFERRED (4) SPKR./STRBS. FROM SH.1 TO SH. 2 PER FIELD CONDITIONS.
5	9/23/99	CS	DELETED (2) AREA SMK. DETS., (1) DUCT SMK. DETS., (1) RELAY FOR FAN SHUTDOWN, (1) PRE-ACTION PNL. & (1) STRB. FROM TTB #15 D-504319 & TRANSFERRED TO TTB #25B D-505652. DELETED (1) MANUAL STATION FROM TTB #15 D-504319 & TRANSFERRED TO TTB #25A D-504948-11 PER FJ-65149.
4	9/23/99	CS	CORRECTED FLOOR PAGE CKTS. FROM 'A' & 'B' TO 'C' & 'D' PER FIELD CONDITIONS.
3	6/25/99	CS	ADDED (4) SPKR./STRBS. ON 36TH FL. FOR 'SOLOMON SMITH BARNEY' PER FJ-65150.
2	6/24/99	CS	ADDED (2) AREA SMK. DETS., (1) DUCT SMK. DET., (1) RELAY FOR FAN SHUTDOWN, (1) MANUAL PULL STATION, (1) PRE-ACTION PNL. & (1) STRB. ON 36TH FL. FOR 'SOLOMON SMITH BARNEY' PER FJ-65149.
1	6/24/99	CS	RISER REDRAWN. SEE DWG# E-504111-4 SH. 4 FOR REFERENCING PAST REVISIONS.

OFFICE BUILDING
7 WORLD TRADE CENTER
N.Y.C.

CONTRACTOR | ENGINEER

PARTIAL RISER DIAGRAM
36TH FLOOR

DRN	L.H.
APPVD	
ENGR	C.S.
CKD	
DATE	6/24/99
SCALE	N.T.S.
SHEET	1
OF	2
REV	6

FIRECOM, INC.
CASE/AtME
39-27 STREET
WOODSIDE, NEW YORK 11377

JOB# FJ-26840
DWG# B-504111-36

36TH FLOOR

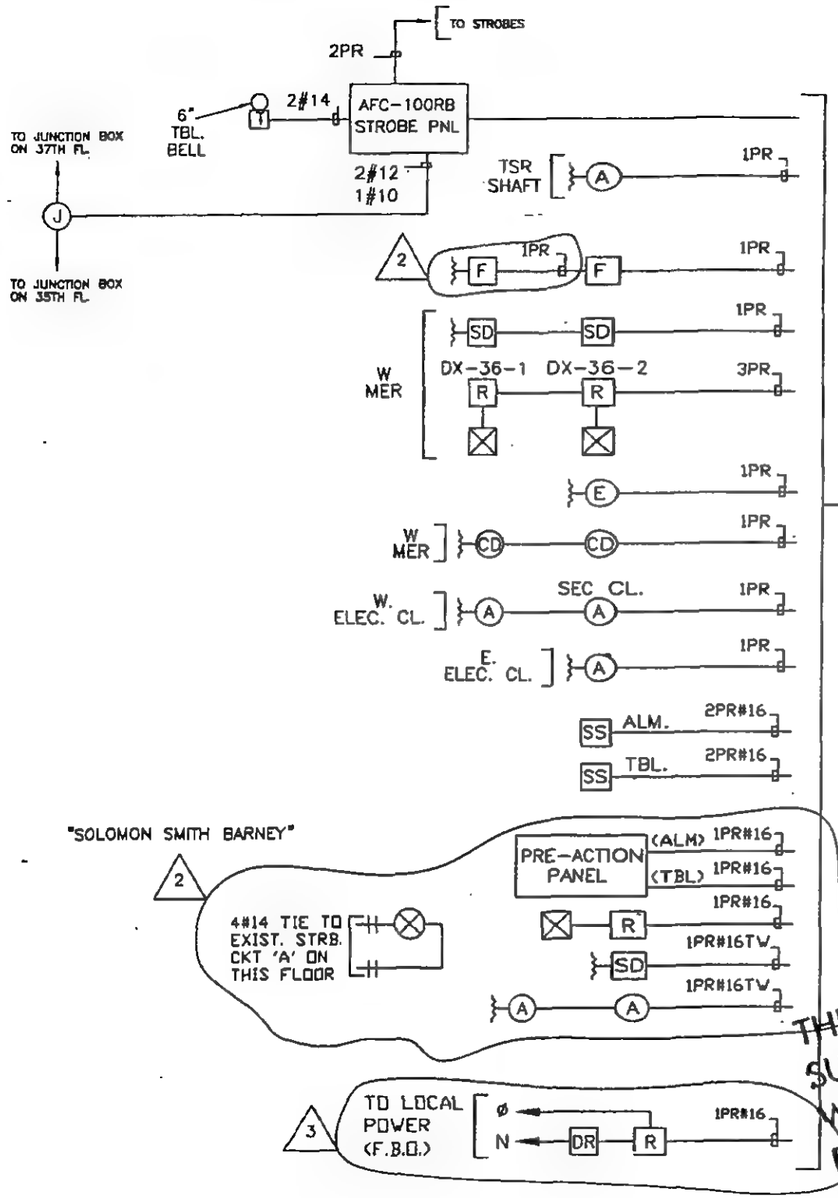

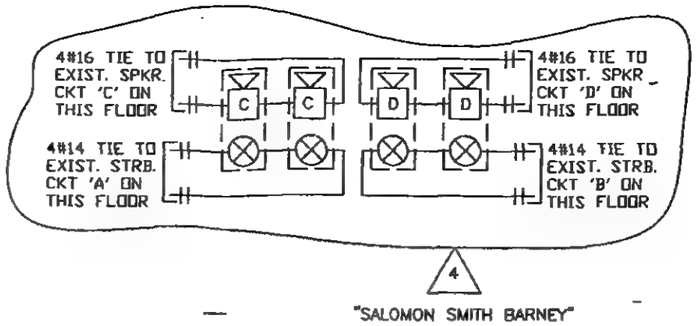

"SALOMON SMITH BARNEY"

TTB#25B
D-505652
ON 37TH FL.

TTB#25A
D-504948-11
ON 37TH FL.

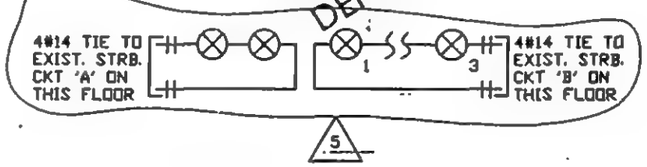

"SALOMON SMITH BARNEY"

"SOLOMON SMITH BARNEY"

THIS DRAWING IS NOT SUITABLE FOR FILING WITH THE NYC FIRE DEPT. OR BUILDING DEPT.

JUN 0 9 2000

THIS DRAWING IS NOT SUITABLE FOR FILING WITH THE NYC FIRE DEPT. OR BUILDING DEPT.

36TH FLOOR

LEGEND

SYMBOL	DESCRIPTION
TTB	TRANSMISSION TERMINAL BOX
⊗	STROBE LIGHT
▷□⊗	COMB. SPKR/STROBE
▷□	SPEAKER F = FLUSH
A	AREA SMOKE DETECTOR
E	ELEVATOR LOBBY DETECTOR
H	HEAT DETECTOR
SD	DUCT SMOKE DETECTOR S = SUPPLY R = RETURN
F/C	FUSE CUT-OUT
⊠	FAN SHUTDOWN
R	RELAY
D	DAMPER
DR	DOOR RELEASE
F	MANUAL STATION
WS	WARDEN STATION S = SURFACE F = FLUSH
	END OF LINE RESISTOR
▶□	STAIR SPEAKER
WF	WATERFLOW SWITCH
TS	TAMPER SWITCH
J	JUNCTION BOX
CD	COMBINATION SMOKE & HEAT DETECTOR
SS	SUB-SYSTEM

5	06/08/00	JM	ADDED (5) STRBS. FOR "SALOMON SMITH BARNEY" PER LJ-80277.
4	06/08/00	JM	TRANSFERRED (4) SPKR./STRBS. FROM SH. 1 TO SH. 2 PER FIELD CONDITIONS.
3	05/05/00	JM	ADDED (1) RELAY FOR DOOR RELEASE ON 36TH FL. PER LJ-80208.
2	9/23/99	CS	TRANSFERRED (2) AREA SMK. DETS., (1) DUCT SMK. DETS., (1) RELAY FOR FAN SHUTDOWN, (1) PRE-ACTION PNL. & (1) STRB. FROM TTB#15 D-504319 TO TTB #25B D-505652. TRANSFERRED (1) MANUAL STATION FROM TTB#15 D-504319 TO TTB #25A D-504948-11 PER FJ-65149.
1	6/24/99	CS	RISER REDRAWN. SEE DWG# E-504111-4 SH. 4 FOR REFERENCING PAST REVISIONS.

REV	DATE	BY	DESCRIPTION

OFFICE BUILDING
7 WORLD TRADE CENTER
N.Y.C.

CONTRACTOR | ENGINEER

PARTIAL RISER DIAGRAM
36TH FLOOR

FIRECOM, INC. CASE/ACME
38-27 STREET
WOODSIDE, NEW YORK 11377

DSN	L.H.
APPVD	
DWN	C.S.
CKD	
DATE	6/24/99
SCALE	N.T.S.
SHEET	2
OF	2
JOB#	FJ-26840
DWG#	B-504111-36
REV	5

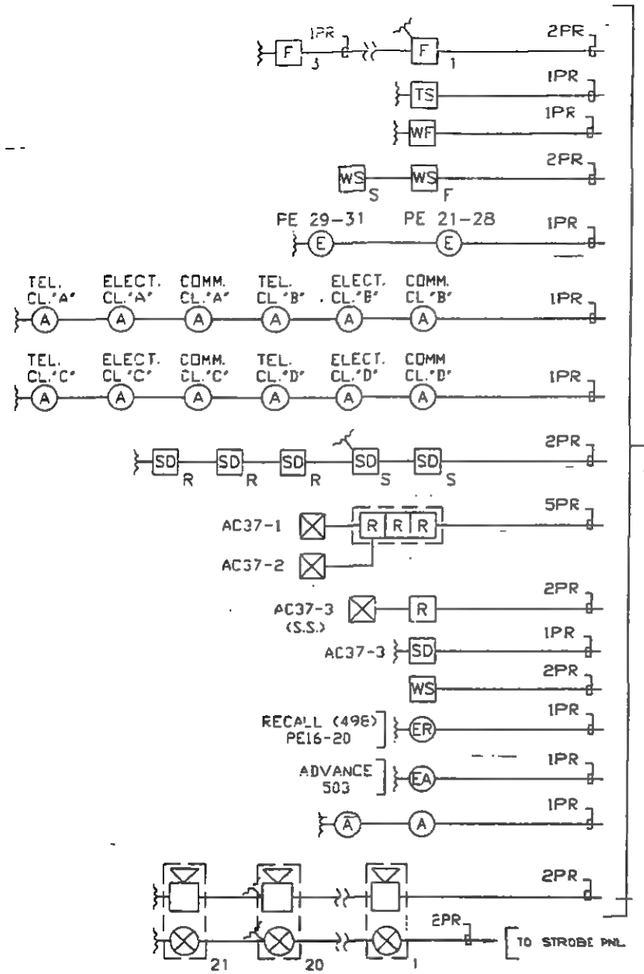

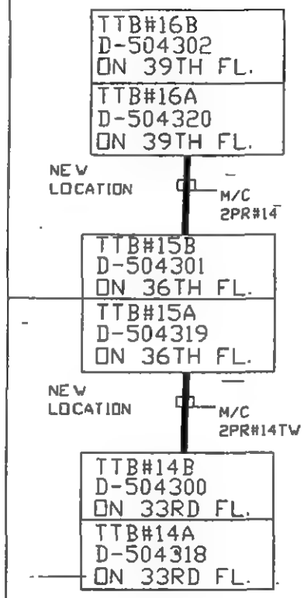

LEGEND

SYMBOL	DESCRIPTION
TTB	TRANSMISSION TERMINAL BOX
⊗	STROBE LIGHT
⊗	COMB. SPKR/STROBE
	SPEAKER F = FLUSH
A	AREA SMOKE DETECTOR
E	ELEVATOR LOBBY DETECTOR
H	HEAT DETECTOR
SD	DUCT SMOKE DETECTOR S = SUPPLY R = RETURN
F/C	FUSE CUT-OUT
	FAN SHUTDOWN
R	RELAY
D	DAMPER
DR	DOOR RELEASE
F	MANUAL STATION
WS	WARDEN STATION S = SURFACE F = FLUSH
	END OF LINE RESISTOR
	STAIR SPEAKER
WF	WATERFLOW SWITCH
TS	TAMPER SWITCH
ER	ELEVATOR RECALL JUNCTION BOX
SS	SUB-SYSTEM
EA	ELEVATOR ADVANCE

REV	DATE	BY	DESCRIPTION
1	6/24/99	C.S.	RISER REDRAWN. SEE DWG# E-504111-4 SH. 4 FOR REFERENCING PAST REVISIONS

OFFICE BUILDING
7 WORLD TRADE CENTER
N.Y.C.

CONTRACTOR | ENGINEER

PARTIAL RISER DIAGRAM
37TH FLOOR

FIRECOM, INC.
CASE/ACME
36-27 STREET
WOODSIDE, NEW YORK 11377

DWN	L.H.
APPVD	
ENGR	C.S.
CKD	
DATE	6/24/99
SCALE	N.T.S.
SHEET	1
OF	2
JOB #	FJ-26840
DWG #	E-504111-37
REV	1

37TH FLOOR

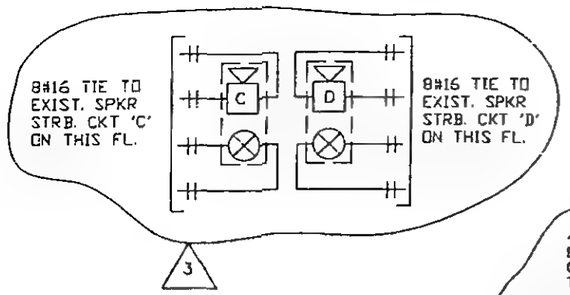

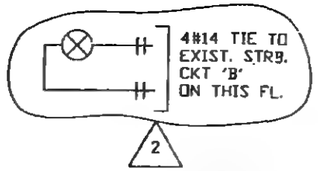

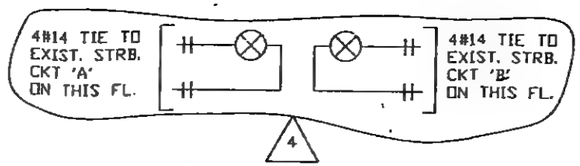

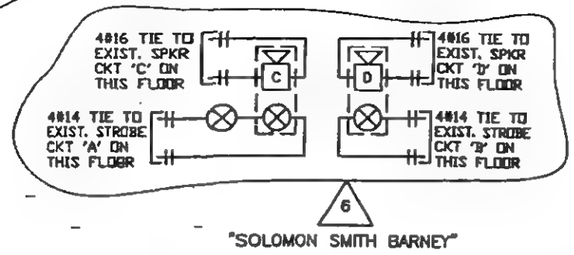

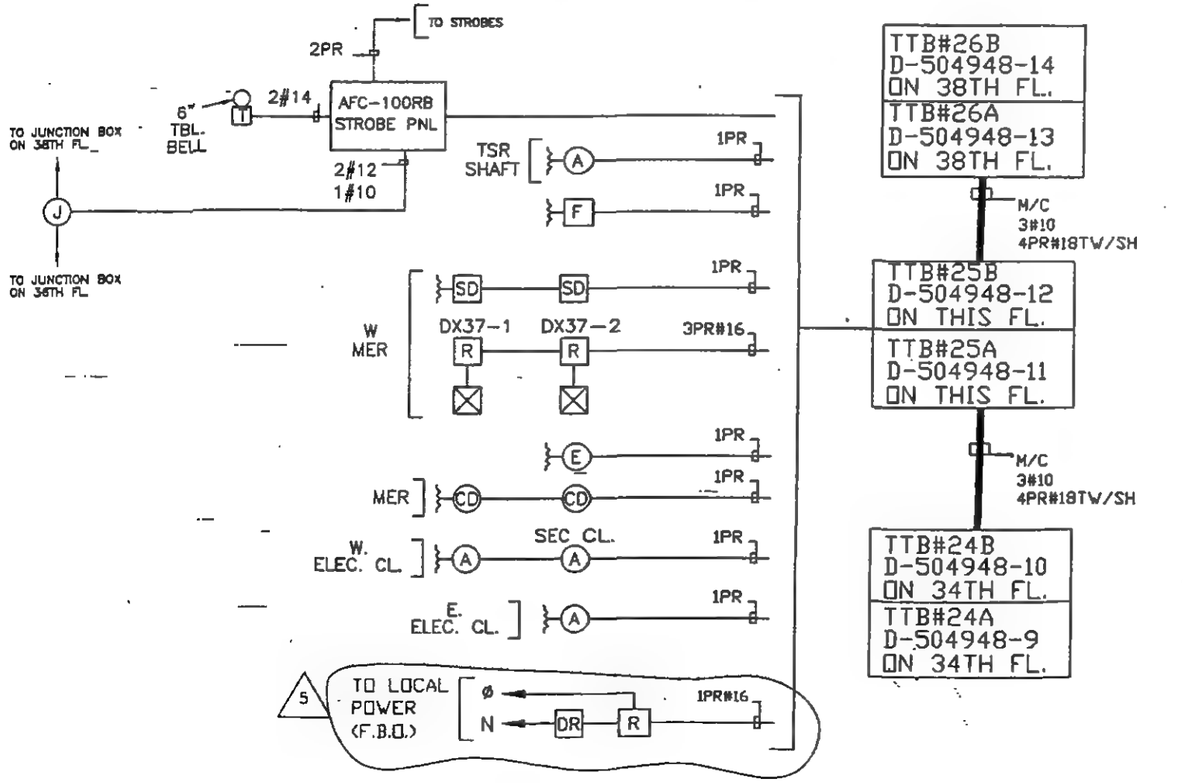

LEGEND

SYMBOL	DESCRIPTION
TTB	TRANSMISSION TERMINAL BOX
⊗	STROBE LIGHT
⊗	COMB. SPKR/STROBE
	SPEAKER
A	AREA SMOKE DETECTOR
E	ELEVATOR LOBBY DETECTOR
H	HEAT DETECTOR
SD	DUCT SMOKE DETECTOR
F/C	FUSE CUT-OUT
	FAN SHUTDOWN
R	RELAY
D	DAMPER
DR	DOOR RELEASE
F	MANUAL STATION
WS	WARDEN STATION
	END OF LINE RESISTOR
	STAIR SPEAKER
WF	WATERFLOW SWITCH
TS	TAMPER SWITCH
J	JUNCTION BOX
CD	COMBINATION SMOKE & HEAT DETECTOR

REV	DATE	BY	DESCRIPTION
6	09/11/00	JM	ADDED (2) SPKR./STRBS., (1) STROBE FOR 'SALOMON SMITH BARNEY' PER LJ-80417.
5	05/05/00	JM	ADDED (1) RELAY FOR DOOR RELEASE ON 37TH FL. PER LJ-80208.
4	7/2/99	CS	ADDED (2) STROBES ON 37TH FL FOR 'SOLOMON SMITH BARNEY' PER FJ-65204.
3	7/2/99	CS	CORRECTED FLOOR PAGE CKTS. FROM 'A & 'B' TO 'C' & 'D' PER FIELD CONDITIONS.
2	6/24/99	CS	ADDED (1) STROBE ON 37TH FL FOR 'SOLOMON SMITH BARNEY' PER FJ-65147.
1	6/24/99	CS	RISER REDRAWN. SEE DWG# E-504111-4 SH. 4 FOR REFERENCING PAST REVISIONS.

OFFICE BUILDING
7 WORLD TRADE CENTER
N.Y.C.

CONTRACTOR | ENGINEER

PARTIAL RISER DIAGRAM
37TH FLOOR

FIRECOM, INC.
CASE/ACME
38-27 STREET
WOODSIDE, NEW YORK 11377

DWN	L.H.
APPVD	
ENGR	C.S.
CKD	
DATE	6/24/99
SCALE	N.T.S.
SHEET	2
OF	2
JOB#	FJ-26840
DWG#	E-504111-37.
REV	6

37TH FLOOR

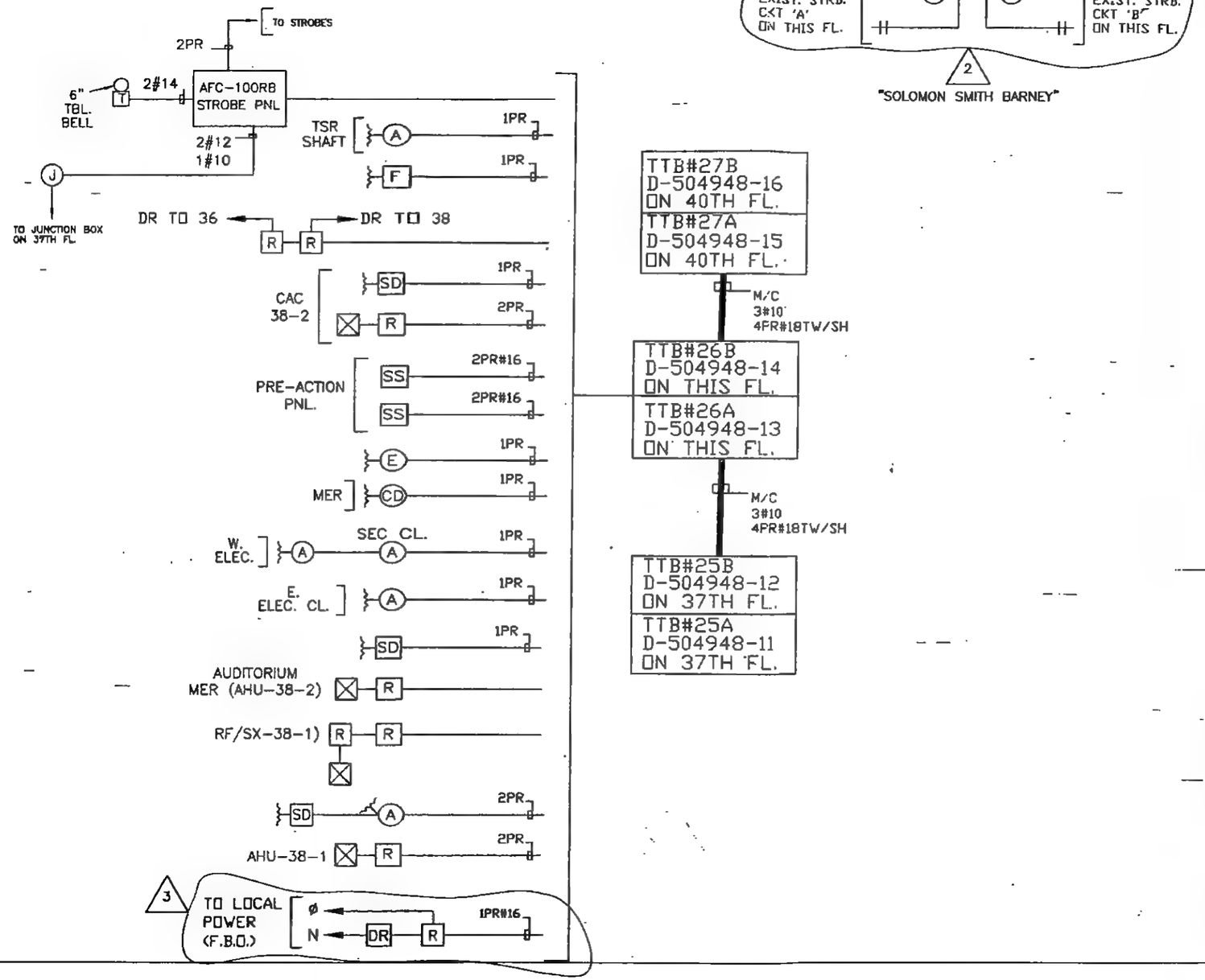

38TH FLOOR

LEGEND

SYMBOL	DESCRIPTION
TTB	TRANSMISSION TERMINAL BOX
	STROBE LIGHT
	COMB. SPKR/STROBE
	SPEAKER
A	AREA SMOKE DETECTOR
E	ELEVATOR LOBBY DETECTOR
H	HEAT DETECTOR
SD	DUCT SMOKE DETECTOR
F/C	FUSE CUT-OUT
	FAN SHUTDOWN
R	RELAY
D	DAMPER
DR	DOOR RELEASE
F	MANUAL STATION
WS	WARDEN STATION
	END OF LINE RESISTOR
	STAIR SPEAKER
WF	WATERFLOW SWITCH
TS	TAMPER SWITCH
J	JUNCTION BOX
CD	COMBINATION SMOKE & HEAT DETECTOR
SS	SUB-SYSTEM

REV	DATE	BY	DESCRIPTION
3	05/05/00	JM	ADDED (1) RELAY FOR DOOR RELEASE ON 38TH FL. PER LJ-80208.
2	7/2/99	CS	ADDED (2) STROBES ON 38TH FL. FOR 'SOLOMON SMITH BARNEY' PER FJ-65204.
1	7/2/99	CS	RISER REDRAWN. SEE DWG# E-504111-4 SH. 4 FOR REFERENCING PAST REVISIONS.

OFFICE BUILDING
7 WORLD TRADE CENTER
N.Y.C.

CONTRACTOR | ENGINEER

PARTIAL RISER DIAGRAM
38TH FLOOR

DRN	L.H.
APP'D	
ENGR	C.S.
CKD	
DATE	7/2/99
SCALE	N.T.S.
SHEET	2
OF	2
REV	3

FIRECOM, INC. CASE/ACME
30-27 STREET
WOODSIDE, NEW YORK 11377

JOB# FJ-26840
DWG# E-504111-38

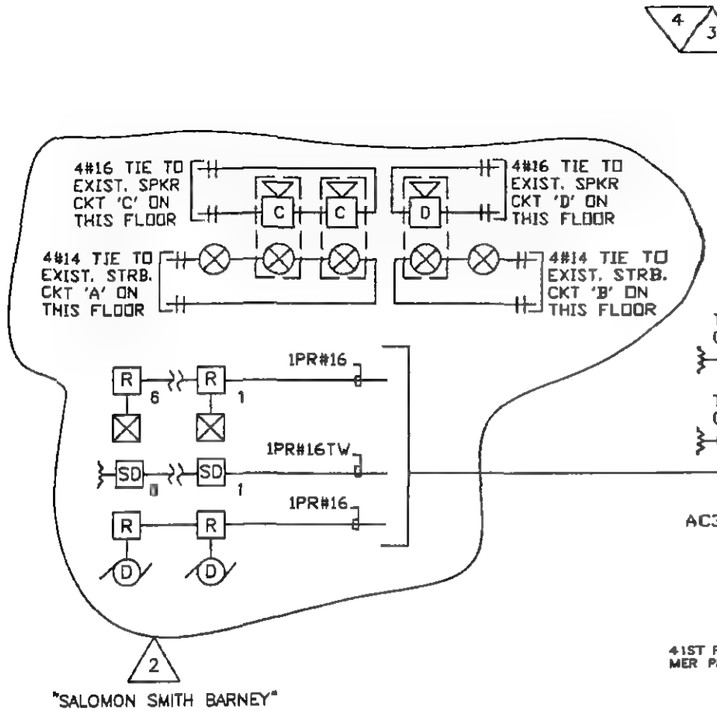

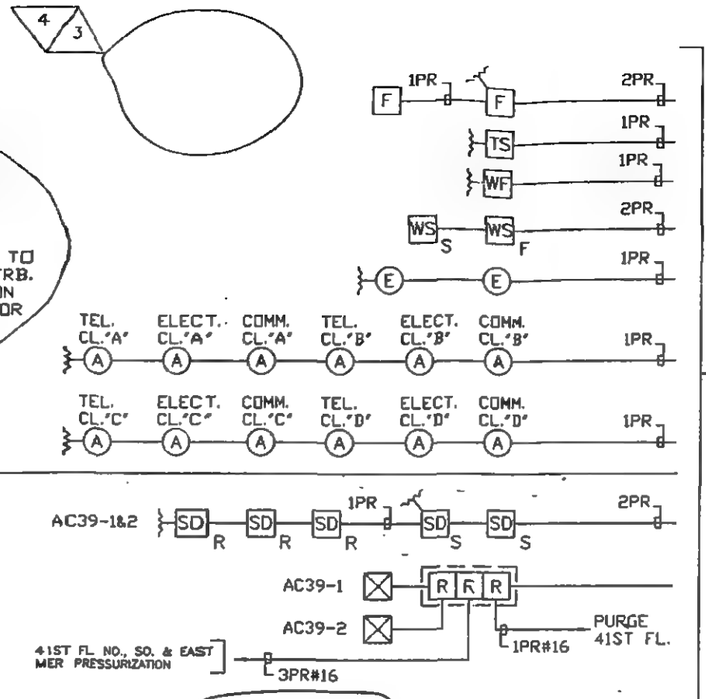

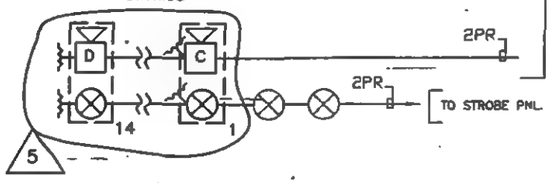

"SALOMON SMITH BARNEY"

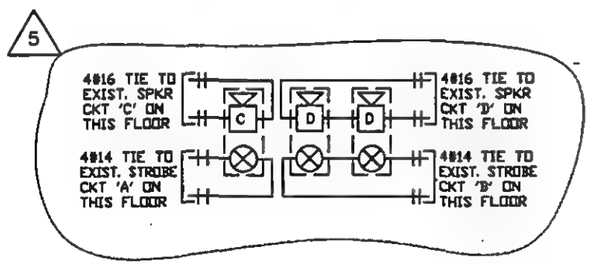

39TH FLOOR

LEGEND

SYMBOL	DESCRIPTION
TTB	TRANSMISSION TERMINAL BOX
⊗	STROBE LIGHT
▷□⊗	COMB. SPKR/STROBE
▷□	SPEAKER F = FLUSH
A	AREA SMOKE DETECTOR
E	ELEVATOR LOBBY DETECTOR
H	HEAT DETECTOR
SD	DUCT SMOKE DETECTOR S = SUPPLY R = RETURN
F/C	FUSE CUT-OUT
⊠	FAN SHUTDOWN
R	RELAY
D	DAMPER
DR	DOOR RELEASE
F	MANUAL STATION
WS	WARDEN STATION S = SURFACE F = FLUSH
—┴—	END OF LINE RESISTOR
▶□	STAIR SPEAKER
WF	WATERFLOW SWITCH
TS	TAMPER SWITCH

5	11/14/00	JM	ADDED (3) SPKR./STRBS. & REPLACED (14) EXIST. SPKR./STRBS. FOR "SALOMON SMITH BARNEY" PER LJ-80504.
4	9/23/99	C.S.	DELETED (2) AREA SMK. DETS., (1) DUCT SMK. DETS., (1) RELAY FOR FAN SHUTDOWN, (1) PRE-ACTION PNL. & (1) STRB. FROM TTB #16 D-504320 & TRANSFERRED TO TTB #26B D-504948-14. DELETED (1) MANUAL STATION FROM TTB#16 D-504320 & TRANSFERRED TO TTB #26A 504948-13 PER FJ-65149.
3	6/25/99	C.S.	ADDED (1) STROBE, (2) AREA SMK. DETS., (1) DUCT SMK. DET., (1) RELAY FOR FAN SHUTDOWN, (1) MANUAL PULL STATION & (1) PRE-ACTION PNL. ON 39TH FL. FOR "SOLOMON SMITH BARNEY" PER FJ-65149.
2	6/16/99	C.S.	ADDED (3) SPEAKER/STROBES, (2) STROBES, (6) DUCT SMK. DETS., (6) RELAYS FOR FAN SHUTDOWN & (2) RELAYS FOR DAMPER CONTROL ON 39TH FL. FOR "SOLOMON SMITH BARNEY" PER FJ-65162.
1	6/16/99	C.S.	RISER REDRAWN. SEE DWG# E-504111-4 SH. 4 FOR REFERENCING PAST REVISIONS.

REV	DATE	BY	DESCRIPTION

OFFICE BUILDING
7 WORLD TRADE CENTER
N.Y.C.

CONTRACTOR | ENGINEER

PARTIAL RISER DIAGRAM
39TH FLOOR

FIRECOM, INC. CASE/ACME
38-27 STREET
WOODSIDE, NEW YORK 11377

DRWN	L.H.
APPVD	
ENGR	C.S.
CKD	
DATE	6/16/99
SCALE	N.T.S.
SHEET	1
OF	2
JOB#	FJ-26840
DWG#	B-504111-39
REV	5

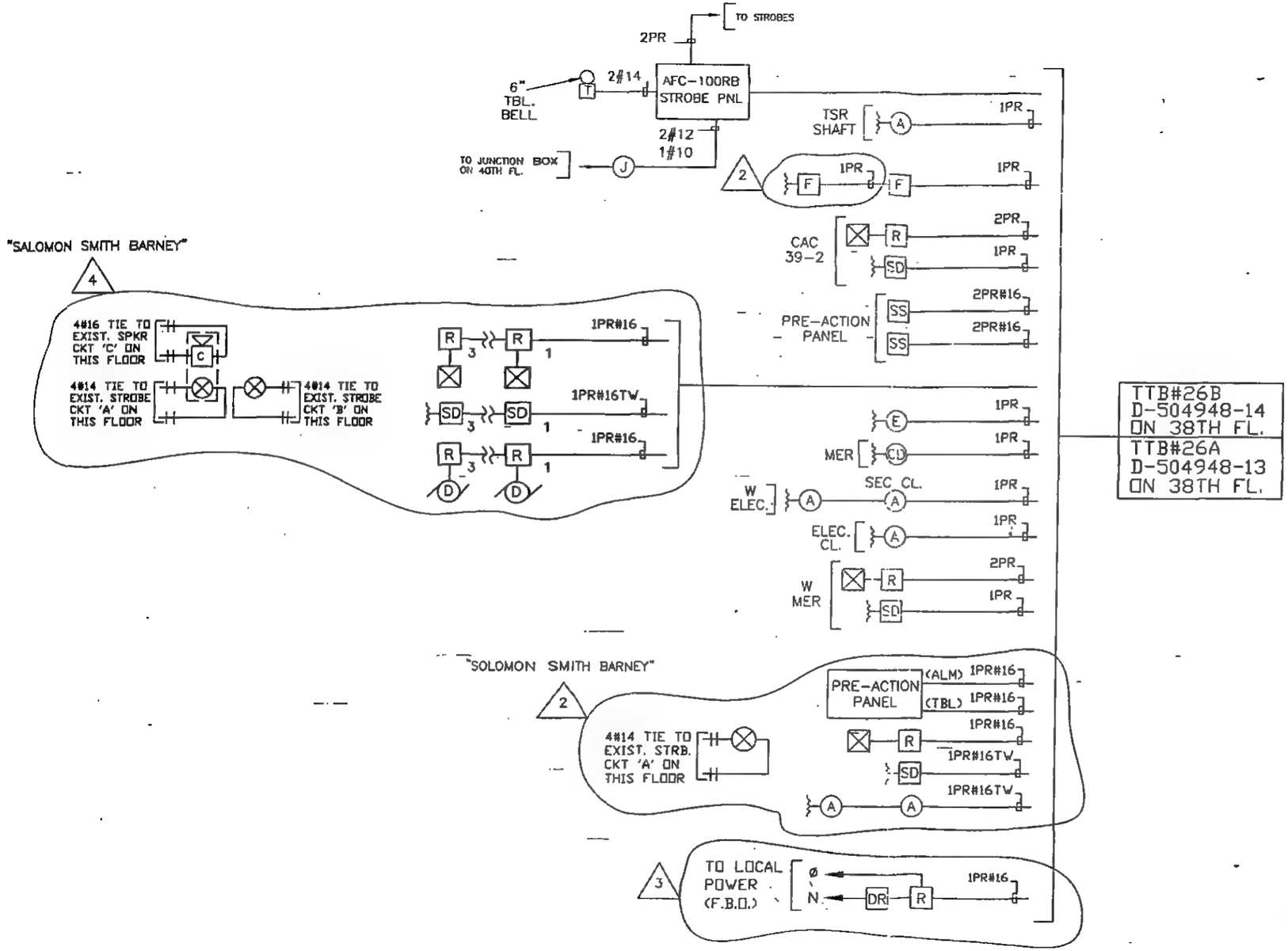

LEGEND	
SYMBOL	DESCRIPTION
TTB	TRANSMISSION TERMINAL BOX
	STROBE LIGHT
	COMB. SPKR/STROBE
	SPEAKER F = FLUSH
A	AREA SMOKE DETECTOR
E	ELEVATOR LOBBY DETECTOR
H	HEAT DETECTOR
SD	DUCT SMOKE DETECTOR S = SUPPLY R = RETURN
F/C	FUSE CUT-OUT
	FAN SHUTDOWN
R	RELAY
D	DAMPER
DR	DOOR RELEASE
F	MANUAL STATION
WS	WARDEN STATION S = SURFACE F = FLUSH
	END OF LINE RESISTOR
	STAIR SPEAKER
WF	WATERFLOW SWITCH
TS	TAMPER SWITCH
J	JUNCTION BOX
SS	SUB-SYSTEM
CD	COMBINATION SMOKE & HEAT DETECTOR

REV	DATE	BY	DESCRIPTION
4	11/22/00	JM	ADDED (1) SPKR./STRB., (1) STRB., (3) DUCT SMK. DETS., (3) RELAYS FOR FAN SHUTDOWN & (3) RELAYS FOR DAMPER CONTROL FOR "SALOMON SMITH BARNEY" PER LJ-80504-01.
3	05/05/00	JM	ADDED (1) RELAY FOR DOOR RELEASE ON 39TH FL. PER LJ-80208.
2	9/23/99	CS	TRANSFERRED (2) AREA SMK. DETS., (1) DUCT SMK. DETS., (1) RELAY FOR FAN SHUTDOWN, (1) PRE-ACTION PNL. & (1) STRB. FROM TTB#16 D-504320 TO TTB #26B D-504948-14. TRANSFERRED (1) MANUAL STATION FROM TTB#16 D-504320 TO TTB #26A D-504948-13 PER FJ-65149.
1	6/16/99	CS	RISER REDRAWN. SEE DWG# E-504111-4 SH. 4 FOR REFERENCING PAST REVISIONS.

OFFICE BUILDING
7 WORLD TRADE CENTER
N.Y.C.

DRN: L.H.
APPVD:
ENGR: C.S.
CKD:
DATE: 6/16/99
SCALE: N.T.S.
SHEET: 2
OF: 2
REV: 4

CONTRACTOR | ENGINEER

PARTIAL RISER DIAGRAM
39TH FLOOR

FIRECOM, INC.
CASE/ACME
38-27 STREET
WOODSIDE, NEW YORK 11377

JOB# FJ-26840
DWG# B-504111-39

39TH FLOOR

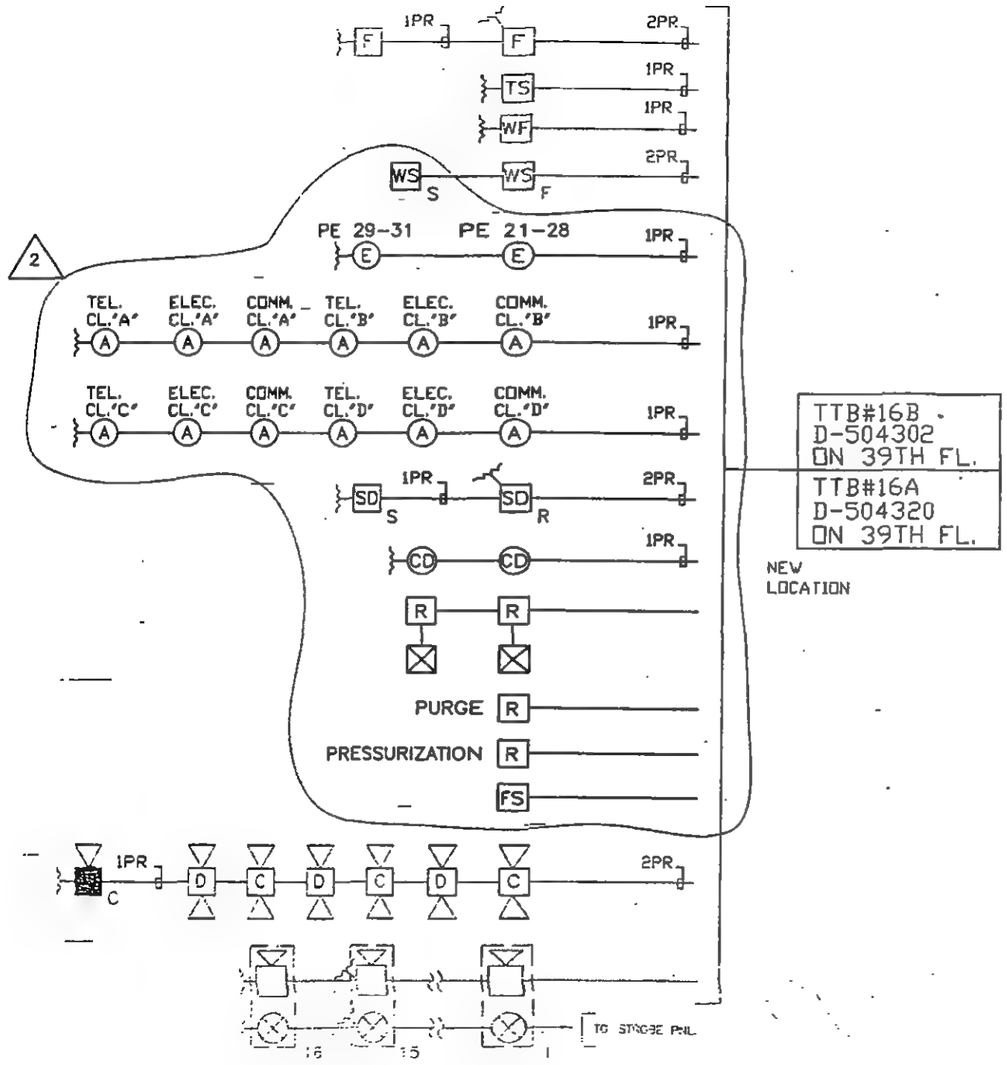

TTB#16B
D-504302
ON 39TH FL.

TTB#16A
D-504320
ON 39TH FL.

NEW
LOCATION

LEGEND

SYMBOL	DESCRIPTION
TTB	TRANSMISSION TERMINAL BOX
⊗	STROBE LIGHT
▷□⊗	COMB. SPKR/STROBE
▷□	SPEAKER
A	AREA SMOKE DETECTOR
E	ELEVATOR LOBBY DETECTOR
H	HEAT DETECTOR
SD	DUCT SMOKE DETECTOR R = RETURN
F/C	FUSE CUT-OUT
⊠	FAN SHUTDOWN
R	RELAY
D	DAMPER
DR	DOOR RELEASE
F	MANUAL STATION
WS	WARDEN STATION S = SURFACE F = FLUSH
≈	END OF LINE RESISTOR
▶□	STAIR SPEAKER
WF	WATERFLOW SWITCH
TS	TAMPER SWITCH
▷□◁	BI-DIRECTIONAL FLOOR SPEAKERS
FS	FAN STATUS

REV	DATE	BY	DESCRIPTION
2	3/13/00	JM	MODIFIED AS PER FJ-65296.
1	7/2/99	JM	REDRAWN. SEE DWG# B-504111-4 SH. 4 FOR REFERENCING PAST REVISIONS

OFFICE BUILDING
7 WORLD TRADE CENTER
N.Y.C.

CONTRACTOR | ENGINEER

PARTIAL RISER DIAGRAM
40TH FLOOR
"SILVERSTEIN"

FIRECOM, INC.
CASB/ACME
WOODSIDE, NEW YORK 11377

DWN	L.H.
APP'VD	
ENGR	C.S.
CKD	
DATE	7/2/99
SCALE	N.T.S.
SHEET	1
OF	2
REV	2
JOB#	FJ-26840
DWG#	B-504111-40

40TH FLOOR

"SALOMON SMITH BARNEY"

9/3

4#16 TIE TO EXIST. SPKR CKT 'C' ON THIS FLOOR — C C — D D — 4#16 TIE TO EXIST. SPKR CKT 'D' ON THIS FLOOR

CKT 'A' — CKT 'B'

1PR#14 — 1PR#14

6" TBL. BELL — T — PAD-2 STROBE PNL D-STD-1 — 2PR#16

2#14

TO 120 VAC PWR(F.B.O.) — F/C — 2#12 — 1#10 GND

1PR#16TW — A A — 17 — 1

9

1PR — E

MER — 1PR — CD

W. ELEC. — SEC. CL. — A A — 1PR

8

ELEC. CL. — A — 1PR

W. MER — SD — 1PR

F — 1PR

6

WEST OSR — PRE-ACTION PANEL — (TBL.) 1PR#16 — (ALM.) 1PR#16

EAST OSR — PRE-ACTION PANEL — (TBL.) 1PR#16 — (ALM.) 1PR#16

10

"SALOMON SMITH BARNEY"

TTB#27B D-504948-16 ON THIS FL.

TTB#27A D-504948-15 ON THIS FL.

4#14 TIE TO EXIST. STRB. CKT 'A' ON THIS FL. — 4#14 TIE TO EXIST. STRB. CKT 'B' ON THIS FL.

2

"SALOMON SMITH BARNEY"

4#16 TIE TO EXIST. SPKR CKT 'C' ON THIS FLOOR — C C — D D — 4#16 TIE TO EXIST. SPKR CKT 'D' ON THIS FLOOR

4#14 TIE TO EXIST. STRB. CKT 'A' ON THIS FLOOR — 4#14 TIE TO EXIST. STRB. CKT 'B' ON THIS FLOOR

7

"SALOMON SMITH BARNEY"

11

1PR#16 — R — DR — ø N — TO LOCAL POWER (F.B.O.)

1PR#16TW — A

1PR#16 — R — DR — ø N — TO LOCAL POWER (F.B.O.)

4#16 TIE TO EXIST. SPKR CKT 'C' ON THIS FLOOR — C C — D D — 4#16 TIE TO EXIST. SPKR CKT 'D' ON THIS FLOOR

4#14 TIE TO EXIST. STRB. CKT 'A' ON THIS FLOOR — 9 — 1 — 1 — 9 — 4#14 TIE TO EXIST. STRB. CKT 'B' ON THIS FLOOR

4/9

"SALOMON SMITH BARNEY"

40TH FLOOR

LEGEND

SYMBOL	DESCRIPTION
TTB	TRANSMISSION TERMINAL BOX
⊗	STROBE LIGHT
▷□ ⊗	COMB. SPKR/STROBE
▷□	SPEAKER
A	AREA SMOKE DETECTOR
E	ELEVATOR LOBBY DETECTOR
H	HEAT DETECTOR
SD	DUCT SMOKE DETECTOR
F/C	FUSE CUT-OUT
⊠	FAN SHUTDOWN
R	RELAY
D	DAMPER
DR	DOOR RELEASE
F	MANUAL STATION
WS	WARDEN STATION
	END OF LINE RESISTOR
▶□	STAIR SPEAKER
WF	WATERFLOW SWITCH
TS	TAMPER SWITCH
J	JUNCTION BOX
CD	COMBINATION SMOKE & HEAT DETECTOR

11	05/05/00	JM	ADDED (1) RELAY FOR DOOR RELEASE PER L.J-80208.
10	04/24/00	JM	ADDED (2) PRE-ACTION PNLS. FOR "SALOMON SMITH BARNEY" PER L.J-80202.
9	03/13/00	JM	MODIFIED AS PER F.J-65296.
8	03/09/00	JM	DELETED FIRE ALARM CONTROL PNL WITH UNDER FLOOR DETS. & STROBE, ANN. PNL FOR UNDER FLOORS AS PER L.J-80061.
7	02/02/00	JM	ADDED (3) SPKR/STRB ON 40TH FL FOR "SALOMON SMITH BARNEY" PER L.J-80045-01.
6	01/31/00	JM	DELETED SUB-SYSTEM, FAN STATUS & FAN SHUTDOWN FROM 40TH FL. PER L.J-80061.
5	01/07/00	JM	ADDED (1) DUCT SMK. DET. & (1) RELAY FOR FAN SHUTDOWN ON 40TH FL. FOR "SALOMON SMITH BARNEY" PER L.J-80049.
4	01/06/00	CS	ADDED (18) SPKR./STRBS., (1) AREA SMK. DET., (5) RELAYS FOR DAMPER CONTROL & (1) RELAY FOR DOOR RELEASE ON 40TH FL. FOR "SALOMON SMITH BARNEY" PER L.J-80045.
3	9/18/99	CS	ADDED (2) PANEL STRB PNL., (4) SPKR/STRBS., (2) DUCT SMK. DETS., (2) RELAYS FOR FAN SHUTDOWN, (17) AREA SMK. DETS. & (1) WARDEN STATION ON 40TH FL. FOR "SALOMON SMITH BARNEY" PER F.J-65296.
2	7/2/99	CS	ADDED (2) STROBES ON 40TH FL. FOR "SALOMON SMITH BARNEY" PER F.J-65274.
1	7/2/99	CS	RISER REDRAWN. SEE DWG# F.J-504111-4 SH. 4 FOR REFERENCING PAST REVISIONS.

REV	DATE	BY	DESCRIPTION

OFFICE BUILDING
7 WORLD TRADE CENTER
N.Y.C.

CONTRACTOR | ENGINEER

PARTIAL RISER DIAGRAM
40TH FLOOR
"SALOMON SMITH BARNEY"

DRN	L.H.
APP'D	
ENGR	C.S.
CK'D	
DATE	7/2/99
SCALE	N.T.S.
SHEET	2
OF	2
REV	11

FIRECOM, INC.
CASE/ACME
39-27 STREET
WOODSIDE, NEW YORK 11377

JOB# FJ-26840
DWG# B-504111-40

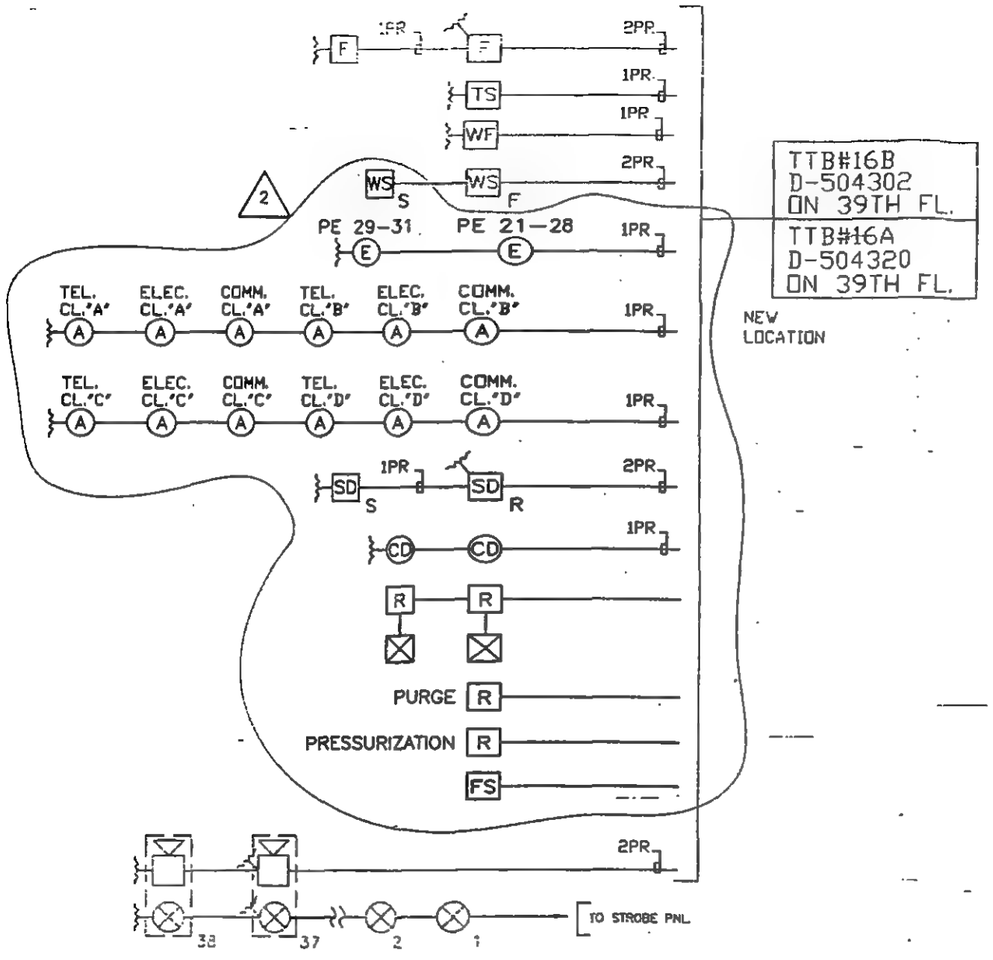

TTB#16B
D-504302
ON 39TH FL.

TTB#16A
D-504320
ON 39TH FL.

NEW LOCATION

LEGEND

SYMBOL	DESCRIPTION
TTB	TRANSMISSION TERMINAL BOX
⊗	STROBE LIGHT
▷□⊗	COMB. SPKR/STROBE
▷□	SPEAKER
A	AREA SMOKE DETECTOR
E	ELEVATOR LOBBY DETECTOR
H	HEAT DETECTOR
SD	DUCT SMOKE DETECTOR R = RETURN
F/C	FUSE CUT-OUT
⊠	FAN SHUTDOWN
R	RELAY
D	DAMPER
DR	DOOR RELEASE
F	MANUAL STATION
WS	WARDEN STATION S = SURFACE F = FLUSH
⊣	END OF LINE RESISTOR
▶□	STAIR SPEAKER
WF	WATERFLOW SWITCH
TS	TAMPER SWITCH
FS	FAN STATUS

REV	DATE	BY	DESCRIPTION
2	3/13/00	JH	MODIFIED AS PER FJ-65296.
1	7/6/99	CS	AS-BUILT DRAWN. SEE DWG# B-504111-2 SH. 5 FOR REFERENCING PAST REVISIONS.

OFFICE BUILDING
7 WORLD TRADE CENTER
N.Y.C.

CONTRACTOR | ENGINEER

PARTIAL RISER DIAGRAM
41ST FLOOR
"SILVERSTEIN"

FIRECOM, INC.
CASE/ACME
38-27 STREET
WOODSIDE, NEW YORK 11377

DRN	L.H.
APPVD	
ENGR	C.S.
CKD	
DATE	7/6/99
SCALE	N.T.S.
SHEET	1
OF	2
REV	2
JOB#	FJ-26840
DWG#	B-504111-41

41ST FLOOR

"SALOMON SMITH BARNEY"

7/3

4#16 TIE TO EXIST. SPKR CKT 'C' ON THIS FLOOR

4#16 TIE TO EXIST. SPKR CKT 'D' ON THIS FLOOR

CKT 'A' C C D D CKT 'B'

1PR#14 1PR#14

6" TBL. BELL T

PAD-2 STROBE PNL D-STD-2

2PR#16

2#14

2#12

1#10 GND

TO 120 VAC PWR(F.B.O.) F/C

1PR#16TW

A A

17 1

4#14 TIE TO EXIST. STRB. CKT 'A' ON THIS FL.

4#14 TIE TO EXIST. STRB. CKT 'B' ON THIS FL.

2

"SALOMON SMITH BARNEY"

5

6

7

E

CD

W.EL.CL. A

SEC CLST. A

AHU41-8 R

SD

F

S. MER SD SD

R R

AHU 41-7

TTB#28B D-504948-18 ON 42ND FL.

TTB#28A D-504948-17 ON 42ND FL.

"SALOMON SMITH BARNEY"

4/7

1PR#16TW A

4#16 TIE TO EXIST. SPKR CKT 'C' ON THIS FLOOR

4#16 TIE TO EXIST. SPKR CKT 'D' ON THIS FLOOR

C C D D

4#14 TIE TO EXIST. STRB. CKT 'A' ON THIS FLOOR

10 1 1 11

4#14 TIE TO EXIST. STRB. CKT 'B' ON THIS FLOOR

WEST OSR PRE-ACTION PANEL (TBL.) 1PR#16 (ALM.) 1PR#16

EAST OSR PRE-ACTION PANEL (TBL.) 1PR#16 (ALM.) 1PR#16

8

"SALOMON SMITH BARNEY"

9

TO LOCAL POWER (F.B.O.) ø N DR R 1PR#16

41ST FLOOR

LEGEND

SYMBOL	DESCRIPTION
TTB	TRANSMISSION TERMINAL BOX
⊗	STROBE LIGHT
▷□⊗	COMB. SPKR/STROBE
▷□	SPEAKER
A	AREA SMOKE DETECTOR
E	ELEVATOR LOBBY DETECTOR
H	HEAT DETECTOR
SD	DUCT SMOKE DETECTOR
F/C	FUSE CUT-OUT
⊠	FAN SHUTDOWN
R	RELAY
D	DAMPER
DR	DOOR RELEASE
F	MANUAL STATION
WS	WARDEN STATION
	END OF LINE RESISTOR
▶□	STAIR SPEAKER
WF	WATERFLOW SWITCH
TS	TAMPER SWITCH
CD	COMBINATION SMOKE & HEAT DETECTOR

9	05/05/00	J.M.	ADDED (1) RELAY FOR DOOR RELEASE ON 41ST FL. PER LJ-80208.
8	04/24/00	J.M.	ADDED (2) PRE-ACTION PANELS FOR "SALOMON BARNEY" PER LJ-80202.
7	03/13/00	J.M.	MODIFIED AS PER FJ-65296.
6	03/09/00	J.M.	DELETED PRE-ACTION PNL. & ANSUL SYSTEM ON 41ST FL. PER LJ-80061.
5	01/31/00	J.M.	DELETED SUB-SYSTEM, DUCT DETS., FAN SHUT-DOWN & COMBINATION SMK. & HEAT DETS. FROM 41ST FL. PER LJ-80061.
4	01/06/00	J.M.	ADDED (21) SPKR./STRBS., (1) AREA SMK. DETS. & (5) RELAYS FOR DAMPER CONTROL ON 41ST FL. FOR "SALOMON SMITH BARNEY" PER LJ-80046
3	9/18/99	C.S.	ADDED (1) PAD-2 STRB. PNL., (4) SPKR./STRBS., (2) DUCT SMK. DETS., (2) RELAYS FOR FAN SHUTDOWN, (17) AREA SMK. DETS. & (1) WARDEN STATION ON 41ST FL. FOR "SALOMON SMITH BARNEY" PER FJ-65296.
2	7/6/99	C.S.	ADDED (2) STROBES ON 41ST FL. FOR "SALOMON SMITH BARNEY" PER FJ-65204.
1	7/6/99	C.S.	RISER REDRAWN. SEE DWG# E-504111-5 SH. 5 FOR REFERENCING PAST REVISIONS.

REV	DATE	BY	DESCRIPTION

OFFICE BUILDING
7 WORLD TRADE CENTER
N.Y.C.

CONTRACTOR | ENGINEER

PARTIAL RISER DIAGRAM
41ST FLOOR
"SALOMON SMITH BARNEY"

FIRECOM, INC. CASE/ACME
30-27 STREET
WOODSIDE, NEW YORK 11377

DRN	L.H.
APPVD	
ENGR	C.S.
CHKD	
DATE	7/6/99
SCALE	N.T.S.
SHEET	2
OF	2
JOB#	FJ-26840
DWG#	E-504111-41
REV	9

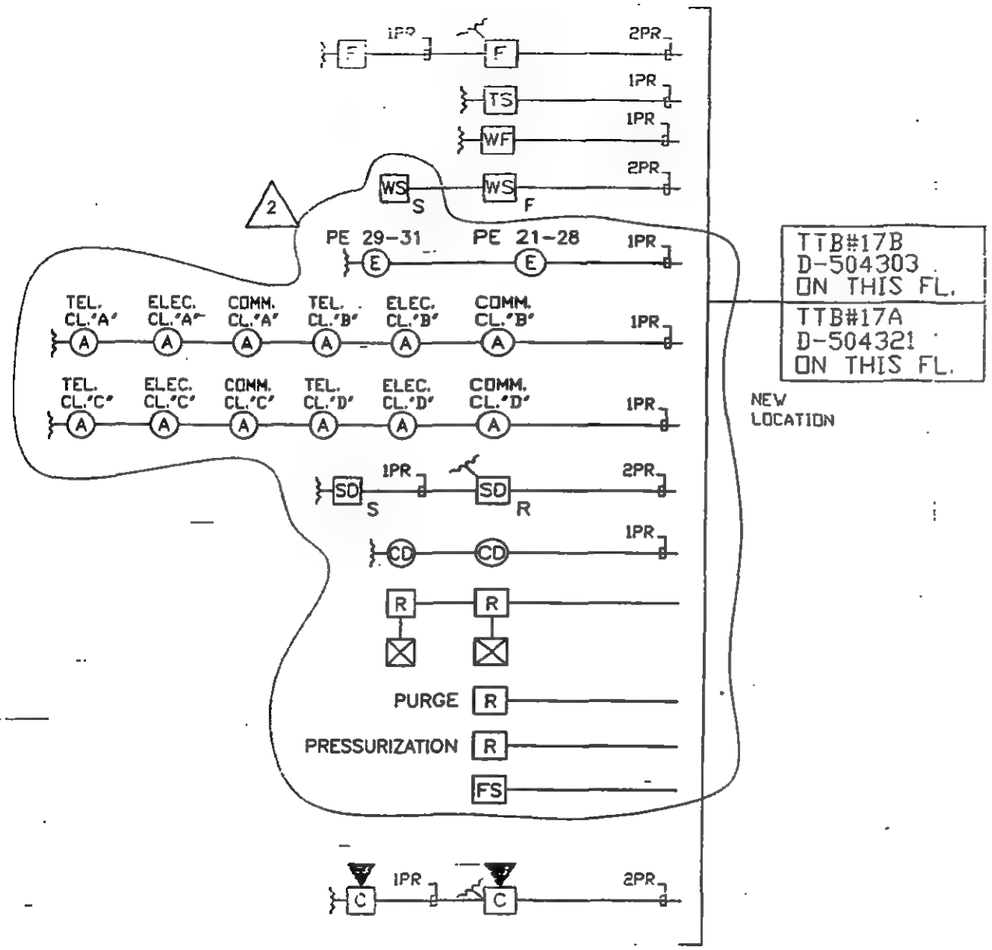

42ND FLOOR

LEGEND	
SYMBOL	DESCRIPTION
TTB	TRANSMISSION TERMINAL BOX
⊗	STROBE LIGHT
▷□⊗	COMB. SPKR/STROBE
▷□	SPEAKER
A	AREA SMOKE DETECTOR
E	ELEVATOR LOBBY DETECTOR
H	HEAT DETECTOR
SD	DUCT SMOKE DETECTOR R = RETURN
F/C	FUSE CUT-OUT
⊠	FAN SHUTDOWN
R	RELAY
D	DAMPER
DR	DOOR RELEASE
F	MANUAL STATION
WS	WARDEN STATION S = SURFACE F = FLUSH
	END OF LINE RESISTOR
◀□	STAIR SPEAKER
WF	WATERFLOW SWITCH
TS	TAMPER SWITCH
FS	FAN STATUS

REV	DATE	BY	DESCRIPTION
2	3/13/00	JM	MODIFIED AS PER FJ-65296.
1	7/6/99	CS	RISER REDRAWN. SEE DWG# E-504111-5 SH. 3 FOR REFERENCING PAST REVISIONS.

OFFICE BUILDING
7 WORLD TRADE CENTER
N.Y.C.

CONTRACTOR | ENGINEER

PARTIAL RISER DIAGRAM
42ND FLOOR
"SILVERSTEIN"

FIRECOM, INC.
CASE/ACME
28-37 STREET
WOODSIDE, NEW YORK 11377

DSN	L.H.
APPVD	
ENGR	C.S.
CKD	
DATE	7/6/99
SCALE	N.T.S.
SHEET	1
JOB#	FJ-26840
OF	2
DWG#	B-504111-42
REV	2

4#14 TIE TO EXIST. STRB. CKT 'A' ON THIS FL.

4#14 TIE TO EXIST. STRB. CKT 'B' ON THIS FL.

2 "SALOMON SMITH BARNEY"

4#16 TIE TO EXIST. SPKR CKT 'C' ON THIS FLOOR

4#16 TIE TO EXIST. SPKR CKT 'D' ON THIS FLOOR

CKT 'A'

CKT 'B'

1PR#14

1PR#14

6" TBL BELL

PAD-2 STROBE PNL D-STD-3

2PR#16

2#14

2#12

TO 120 VAC PWR(F.B.O.)

F/C

1#10 GND

8/3

1PR#16TW

17

1

"SALOMON SMITH BARNEY"

"SALOMON SMITH BARNEY"

9

WEST OSR

PRE-ACTION PANEL

(TBL.) 1PR#16

(ALM.) 1PR#16

EAST OSR

PRE-ACTION PANEL

(TBL.) 1PR#16

(ALM.) 1PR#16

1PR

W. MER

1PR

W. ELEC. CL.

SEC CLST.

1PR

W. MER

1PR

1PR

10

TO LOCAL POWER (F.B.O.)

ø

N

DR

R

1PR#16

TO LOCAL POWER (F.B.O.)

ø

N

DR

R

1PR#16

1PR#16TW

1PR#16

1PR#16

1PR#16

1PR#16

6

8

"SALOMON SMITH BARNEY"

8/5

"SALOMON SMITH BARNEY"

8/7

"SALOMON SMITH BARNEY"

4

4#16 TIE TO EXIST. SPKR CKT 'C' ON THIS FLOOR

4#16 TIE TO EXIST. SPKR CKT 'D' ON THIS FLOOR

4#14 TIE TO EXIST. STRB. CKT 'A' ON THIS FLOOR

4#14 TIE TO EXIST. STRB. CKT 'B' ON THIS FLOOR

9/7

1

1

9/7

42ND FLOOR

TTB#28B D-504948-18 ON THIS FL.

TTB#28A D-504948-17 ON THIS FL.

M/C

EXT. TTB B-508084 ON THIS FL.

LEGEND

SYMBOL	DESCRIPTION
TTB	TRANSMISSION TERMINAL BOX
⊗	STROBE LIGHT
▷□⊗	COMB. SPKR/STROBE
▷□	SPEAKER
A	AREA SMOKE DETECTOR
E	ELEVATOR LOBBY DETECTOR
H	HEAT DETECTOR
SD	DUCT SMOKE DETECTOR
F/C	FUSE CUT-OUT
⊗	FAN SHUTDOWN
R	RELAY
D	DAMPER
DR	DOOR RELEASE
F	MANUAL STATION
WS	WARDEN STATION
⊣	END OF LINE RESISTOR
▶□	STAIR SPEAKER
WF	WATERFLOW SWITCH
TS	TAMPER SWITCH
J	JUNCTION BOX
CD	COMBINATION SMOKE & HEAT DETECTOR

10	05/05/00	JM	ADDED (1) RELAY FOR DOOR RELEASE ON 42ND FL. PER LJ-80208.
9	04/24/00	JM	ADDED (2) PRE-ACTION PANELS FOR "SALOMON SMITH BARNEY" PER LJ-80202.
8	03/13/00	JM	MODIFIED AS PER FJ-65296.
7	02/02/00	JM	ADDED (2) RELAYS FOR DAMPER CONTROL, DELETED (2) AREA SMK. DETS. & (3) SPKR./STROBES FROM 42ND FL. FOR "SALOMON SMITH BARNEY" PER LJ-80048-01.
6	01/31/00	JM	DELETED SUB-SYSTEM, FAN STOP STATUS & FAN SHUTDOWN FROM 42ND FL. PER LJ-80061.
5	01/10/00	JM	ADDED (1) DUCT SMK. DET. & (1) RELAY FOR FAN SUTDOWN ON 42ND FL. FOR "SALOMON SMITH BARNEY" PER LJ-80049.
4	01/07/00	JM	ADDED (21) SPKR./STRBS., (3) AREA SMK. DETS., (4) RELAYS FOR DAMPER CONTROL, (19) DAMPERS, (1) RELAY FOR DOOR RELEASE & (1) EXT. TTB ON 42ND FL. FOR "SALOMON SMITH BARNEY" PER LJ-80048.
3	9/18/99	CS	ADDED (1) PAD-2 STRB. PNL., (4) SPKR./STRBS., (2) DUCT SMK. DETS., (2) RELAYS FOR FAN SHUTDOWN, (17) AREA SMK. DETS. & (1) WARDEN STATION ON 42ND FL. FOR "SALOMON SMITH BARNEY" PER FJ-65296.
2	7/6/99	CS	ADDED (2) STROBES ON 42ND FL. FOR "SALOMON SMITH BARNEY" PER FJ-65204.
1	7/6/99	CS	RISER REDRAWN. SEE DWG# E-504111-5 SH. 5 FOR REFERENCING PAST REVISIONS.

REV	DATE	BY	DESCRIPTION

OFFICE BUILDING
7 WORLD TRADE CENTER
N.Y.C.

DSN: L.H.
APPVD:
ENGR: C.S.
CKD:
DATE: 7/6/99
SCALE: N.T.S.
SHEET: 2
OF: 2
REV: 10

CONTRACTOR | ENGINEER

PARTIAL RISER DIAGRAM
42ND FLOOR
"SALOMON SMITH BARNEY"

FIRECOM, INC. CASE/ACME
38-37 STREET
WOODSIDE, NEW YORK 11377

JOB# FJ-26840
DWG# B-504111-42

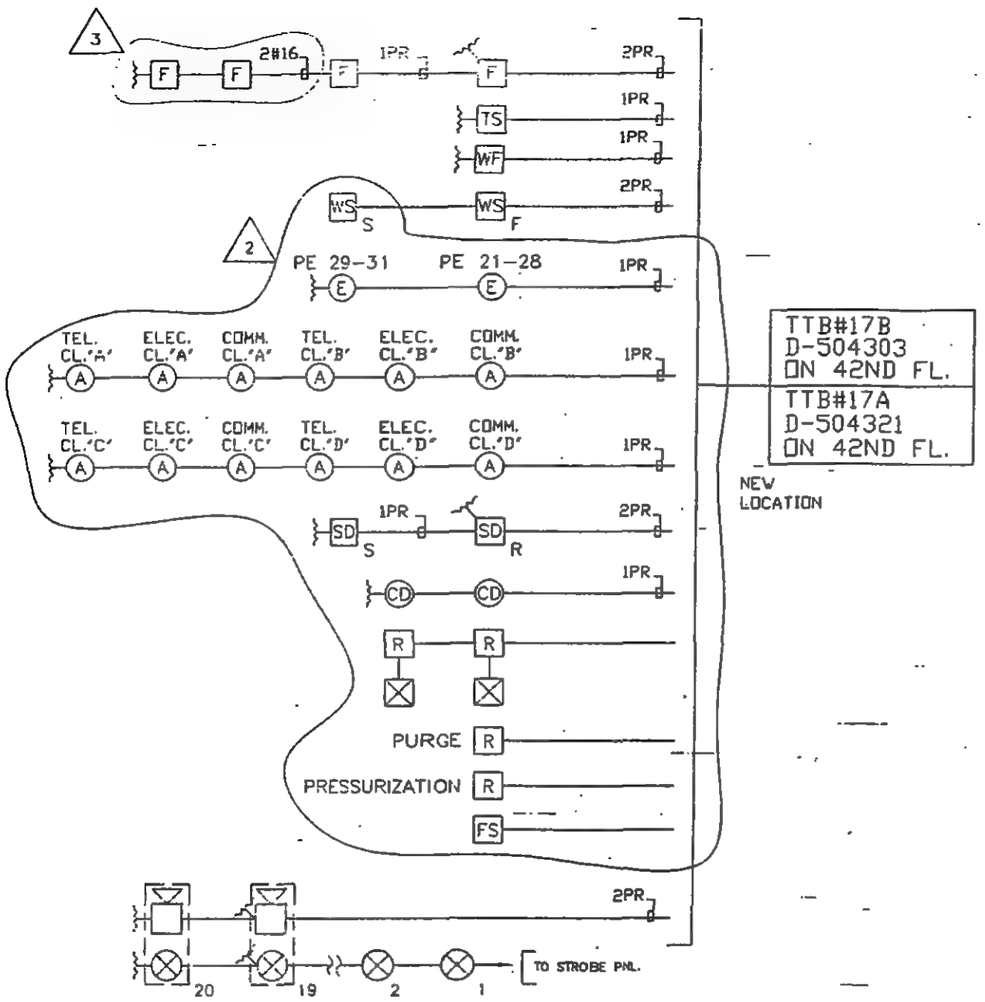

LEGEND	
SYMBOL	DESCRIPTION
TTB	TRANSMISSION TERMINAL BOX
⊗	STROBE LIGHT
▷□⊗	COMB. SPKR/STROBE
▷□	SPEAKER
A	AREA SMOKE DETECTOR
E	ELEVATOR LOBBY DETECTOR
H	HEAT DETECTOR
SD	DUCT SMOKE DETECTOR R = RETURN
F/C	FUSE CUT-OUT
⊠	FAN SHUTDOWN
R	RELAY
D	DAMPER
DR	DOOR RELEASE
F	MANUAL STATION
WS	WARDEN STATION S = SURFACE F = FLUSH
	END OF LINE RESISTOR
▶□	STAIR SPEAKER
WF	WATERFLOW SWITCH
TS	TAMPER SWITCH
FS	FAN STATUS

REV	DATE	BY	DESCRIPTION
3	03/23/00	JM	ADDED (2) MANUAL PULL STATIONS PER LJ-80143
2	03/15/00	JM	MODIFIED AS PER FJ-65E96.
1	07/09/99	CS	RISER REDRAWN. SEE DWG# E-504111-5 SH. 5 FOR REFERENCING PAST REVISIONS.

OFFICE BUILDING
7 WORLD TRADE CENTER
N.Y.C.

CONTRACTOR | ENGINEER

PARTIAL RISER DIAGRAM
43RD FLOOR
"SILVERSTEIN"

FIRECOM, INC.
CASE/ACME
39-27 STREET
WOODSIDE, NEW YORK 11377

DRN	L.H.
APPVD	
ENGR	C.S.
CKD	
DATE	7/9/99
SCALE	N.T.S.
SHEET	1
OF	2
JOB#	FJ-26840
DWG#	B-504111-43
REV	3

43RD FLOOR

4#14 TIE TO EXIST. STRB. CKT 'A' ON THIS FL.

4#14 TIE TO EXIST. STRB. CKT 'B' ON THIS FL.

2

"SALOMON SMITH BARNEY"

4#16 TIE TO EXIST. SPKR CKT 'C' ON THIS FLOOR

4#16 TIE TO EXIST. SPKR CKT 'D' ON THIS FLOOR

CKT 'A'

CKT 'B'

1PR#14

1PR#14

6" TBL BELL

PAD-2 STROBE PNL D-STD-4

2PR#16

2#14

2#12

1#10 GND

TO 120 VAC PWR(F.B.O.)

F/C

1PR#16TW

17

1

6/3

"SALOMON SMITH BARNEY"

4#16 TIE TO EXIST. SPKR CKT 'C' ON THIS FLOOR

4#16 TIE TO EXIST. SPKR CKT 'D' ON THIS FLOOR

CKT 'A'

CKT 'B'

12

1

1

12

1PR#14

1PR#14

6" TBL BELL

PAD-2 STROBE PNL D-STD-5

2PR#16

2#14

2#12

1#10 GND

TO 120 VAC PWR(F.B.O.)

F/C

1PR#16TW

5

1

1PR#16TW

1PR#16TW

1PR#16

1PR#16

5

1

1PR#16

1PR#16

1PR#16

TO LOCAL POWER (F.B.O.)

ø

N

DR

R

7

"SALOMON SMITH BARNEY"

6

5

4

9

TO LOCAL POWER (F.B.O.)

ø

N

DR

R

1PR#16

43RD FLOOR

W. MER

ELEC.

SEC

EMR

S. MER

1PR

4PR

AHU 41-7

TO 42ND DOOR RELEASE

TO 43RD DOOR RELEASE

WEST OSR

PRE-ACTION PANEL

(TBL.)

(ALM.)

1PR#16

EAST OSR

PRE-ACTION PANEL

(TBL.)

(ALM.)

1PR#16

8

"SALOMON SMITH BARNEY"

TTB#29B D-504948-20 ON THIS FL.

TTB#29A D-504948-19 ON THIS FL.

LEGEND	
SYMBOL	DESCRIPTION
TTB	TRANSMISSION TERMINAL BOX
	STROBE LIGHT
	COMB. SPKR/STROBE
	SPEAKER
A	AREA SMOKE DETECTOR
E	ELEVATOR LOBBY DETECTOR
H	HEAT DETECTOR
SD	DUCT SMOKE DETECTOR
F/C	FUSE CUT-OUT
	FAN SHUTDOWN
R	RELAY
D	DAMPER
DR	DOOR RELEASE
F	MANUAL STATION
WS	WARDEN STATION
	END OF LINE RESISTOR ;
WF	WATERFLOW SWITCH
TS	TAMPER SWITCH
CD	COMBINATION SMOKE & HEAT DETECTOR
ER	ELEVATOR RECALL JUNCTION BOX
EA	ELEVATOR ADVANCE

REV	DATE	BY	DESCRIPTION
9	05/05/00	J.M.	ADDED (1) RELAY FOR DOOR RELEASE ON 43RD FL. PER LJ-80208.
8	04/24/00	J.M.	ADDED (2) PRE-ACTION PANELS FOR 'SALOMON SMITH BARNEY' PER LJ-80202.
7	03/22/00	J.M.	ADDED (1) PAD-2 STRB. PNL., (24) SPKR./STRBS., (2) DUCT SMK. DETS., (2) RELAYS FOR FAN SHUTDOWN, (5) AREA SMK. DETS. & (1) TAMPER SWITH, (1) WATERFLOW SWITCH, (1) RELAY FOR DOOR RELEASE & (5) RELAYS FOR DAMPER-CONTROL FOR SALOMON SMITH BARNEY' PER LJ-80143.
6	03/13/00	J.M.	MODIFIED AS PER FJ-65296.
5	03/09/00	C.S.	DELETED PRE-ACTION PNL. (SUB-SYSTEM) FROM THE 43RD FL. PER LLLJ-80061.
4	01/31/00	C.S.	DELETED FAN SHUTDOWN, DUCT SMK. DETS., SUB-SYSTEM & COMBINATION SMK. & HEAT DETS. FROM 43RD FL. PER LJ-80061.
3	9/18/99	C.S.	ADDED (1) PAD-2 STRB. PNL., (4) SPKR./STRBS., (2) DUCT SMK. DETS., (2) RELAYS FOR FAN SHUTDOWN, (17) AREA SMK. DETS. & (1) WARDEN STATION ON 43RD FL. FOR 'SALOMON SMITH BARNEY' PER FJ-65296.
2	7/9/99	C.S.	ADDED (2) STROBES ON 43RD FL. FOR 'SALOMON SMITH BARNEY' PER FJ-65204.
1	7/9/99	C.S.	RISER REDRAWN. SEE DWG# E-504111-5 SH. 5 FOR REFERENCING PAST REVISIONS.

OFFICE BUILDING
7 WORLD TRADE CENTER
N.Y.C.

CONTRACTOR | ENGINEER

PARTIAL RISER DIAGRAM
43RD FLOOR
'SALOMON SMITH BARNEY'

FIRECOM, INC.
CASE/ACME
38-37 STREET
WOODSIDE, NEW YORK 11377

DRN	L.H.
APP'D	
ENGR	C.S.
CKD	
DATE	7/9/99
SCALE	N.T.S.
SHEET	2
JOB#	FJ-26840
OF	2
DWG#	E-504111-43
REV	9

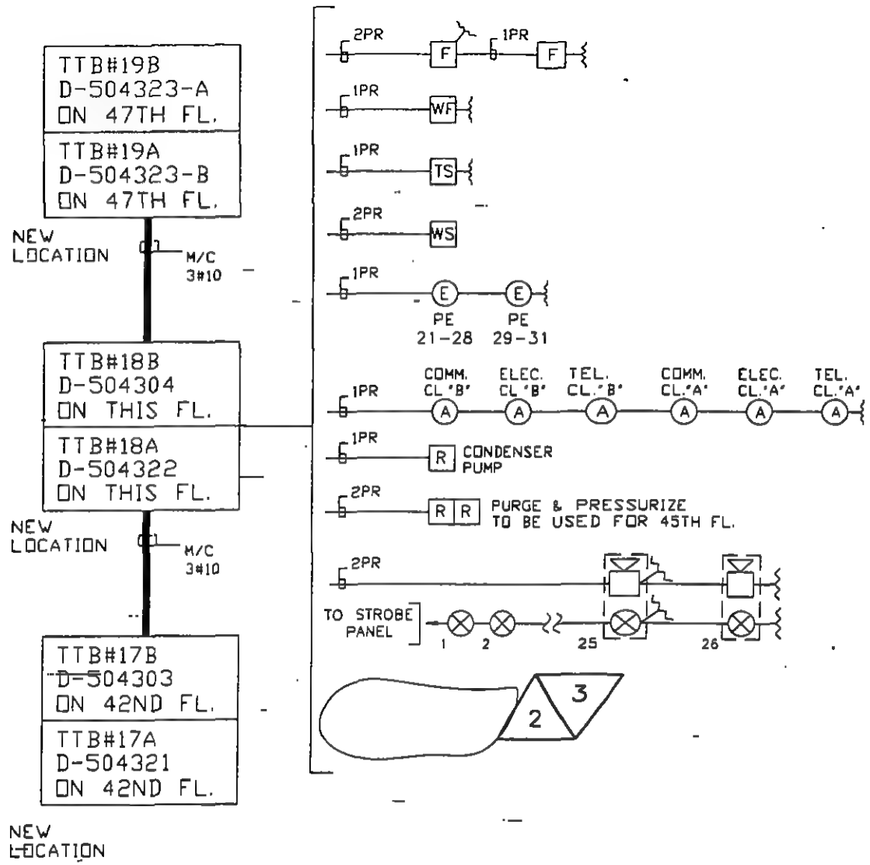

45TH FLOOR

LEGEND

SYMBOL	DESCRIPTION
TTB	TRANSMISSION TERMINAL BOX
⊗	STROBE LIGHT
▷□⊗	COMB. SPKR/STROBE
▷□	SPEAKER F = FLUSH
(A)	AREA SMOKE DETECTOR
(E)	ELEVATOR LOBBY DETECTOR F = FLUSH
(H)	HEAT DETECTOR
SD	DUCT SMOKE DETECTOR S = SUPPLY R = RETURN
F/C	FUSE CUT-OUT
⊠	FAN SHUTDOWN
R	RELAY
(D)	DAMPER
DR	DOOR RELEASE
F	MANUAL STATION
WS	WARDEN STATION S = SURFACE F = FLUSH
⌇	END OF LINE RESISTOR
▶□	STAIR SPEAKER
WF	WATERFLOW SWITCH
TS	TAMPER SWITCH
▷□◁	BI-DIRECTIONAL SPEAKER
(ER)	ELEVATOR RECALL JUNCTION BOX
(J)	JUNCTION BOX
(EA)	ELEVATOR ADVANCE

3	8/23/99	C.S.	TRANSFERRED ALL EQUIPMENT ADDED IN REV. #2 FROM TTB D-504304 TO TTB D-504948-21 ON 45TH FL. PER FIELD CONDITIONS OF FJ-65133.
2	5/25/99	C.S.	ADDED (1) PAD-2 STROBE PNL W/ASSOC. (18) SPKR/STROBES & (19) STROBES, (6) RELAYS FOR DOOR RELEASE & (1) AREA SMOKE DET. ON 45TH FL. PER FJ-65133.
1	5/25/99	C.S.	RISER REDRAWN. SEE DWG# E-504111-5 SH. 5 FOR REFERENCING PAST REVISIONS.

REV	DATE	BY	DESCRIPTION

OFFICE BUILDING
7 WORLD TRADE CENTER
N.Y.C.

CONTRACTOR | ENGINEER

PARTIAL RISER DIAGRAM
45TH FLOOR

FIRECOM, INC.
CASEY/ACHE
39-27 STREET
WOODSIDE, NEW YORK 11377

DRN	A.S.
APPVD	
CHKD	C.S.
CKD	
DATE	5/25/99
SCALE	N.T.S.
SHEET	1
OF	2
REV	3
JOB#	FJ-26840
DWG#	E-504111-45

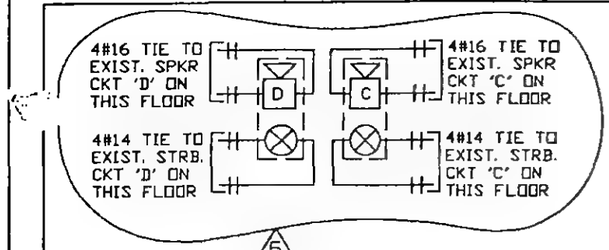

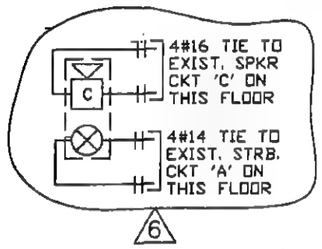

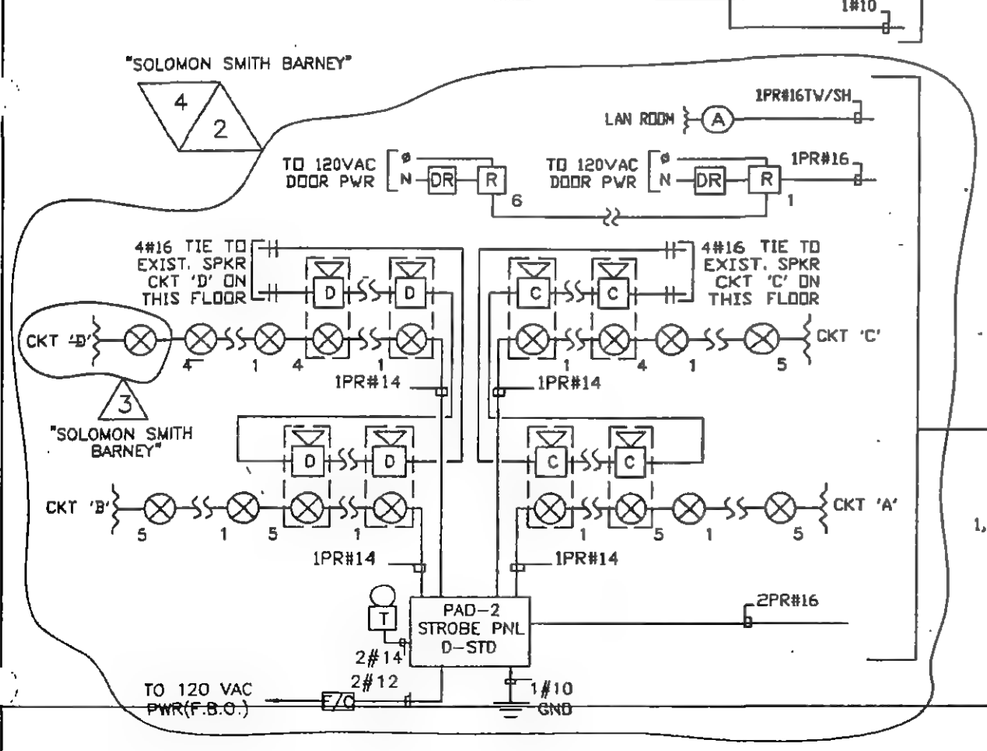

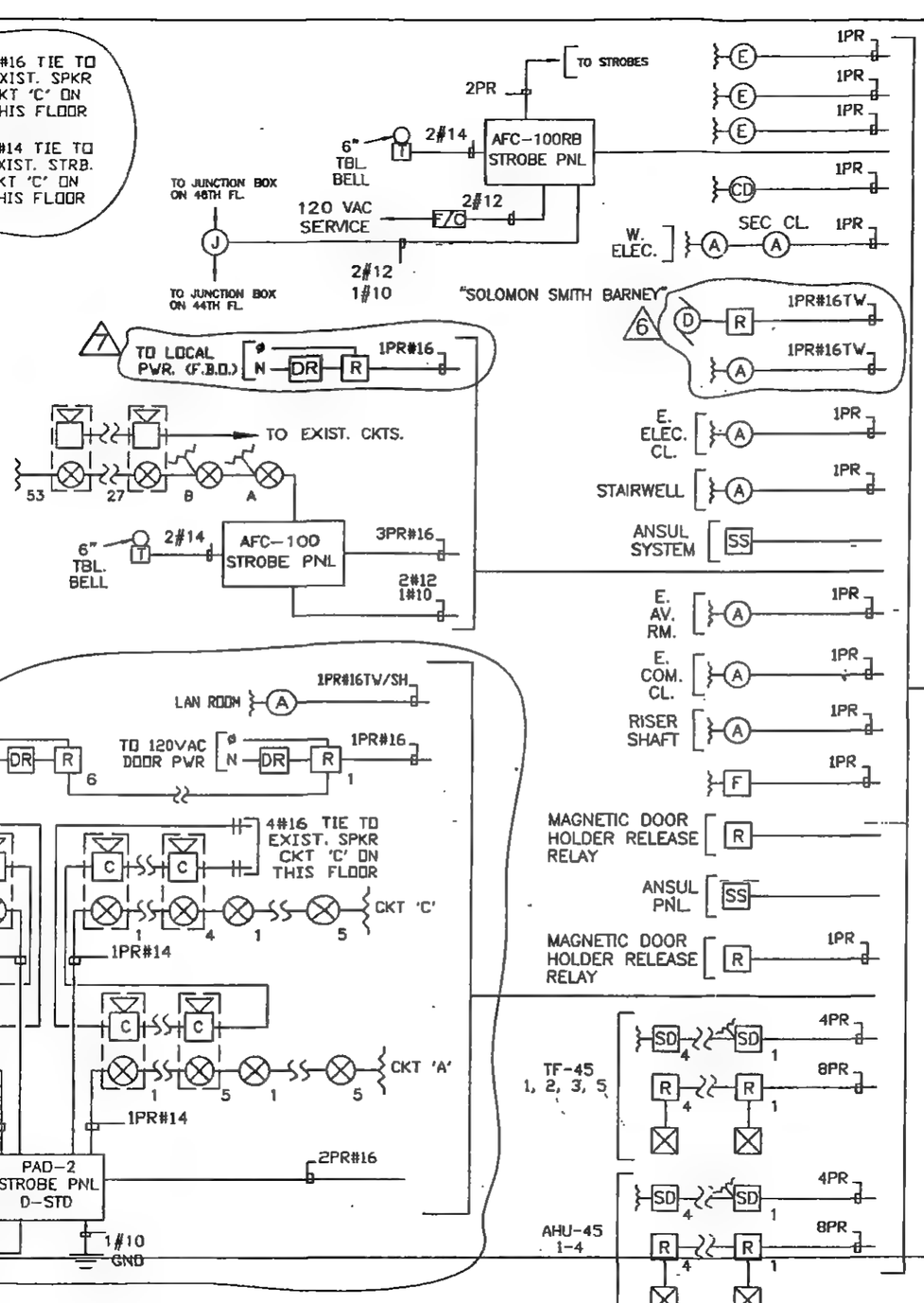

LEGEND

SYMBOL	DESCRIPTION
TTB	TRANSMISSION TERMINAL BOX
⊗	STROBE LIGHT
▷□⊗	COMB. SPKR/STROBE
▷□	SPEAKER
A	AREA SMOKE DETECTOR
E	ELEVATOR LOBBY DETECTOR
SD	DUCT SMOKE DETECTOR
F/C	FUSE CUT-OUT
⊠	FAN SHUTDOWN
R	RELAY
D	DAMPER
DR	DOOR RELEASE
F	MANUAL STATION
WS	WARDEN STATION
∿	END OF LINE RESISTOR
◀□	STAIR SPEAKER
WF	WATERFLOW SWITCH
TS	TAMPER SWITCH
J	JUNCTION BOX
CD	COMBINATION SMOKE & HEAT DETECTOR
SS	SUB-SYSTEM

7	05/05/00	JM	ADDED (1) RELAY FOR DOOR RELEASE ON 45TH FL. PER LJ-80208.
6	12/20/99	JM	ADDED (1) SPKR./STRB., (1) AREA SMK. DET. & (1) RELAY FOR DAMPER CONTROL ON 45TH FL. FOR "SOLOMON SMITH BARNEY" PER LJ-80021.
5	9/17/99	CS	ADDED (2) SPKR./STRBS. ON 45TH FL. FOR "SOLOMON SMITH BARNEY" PER FJ-65320.
4	9/17/99	CS	CORRECTED FLOOR PAGE CKTS. FROM 'A' & 'B' TO 'C' & 'D' PER FIELD CONDITIONS.
3	8/23/99	CS	ADDED (1) STROBE ON 45TH FL. FOR "SOLOMON SMITH BARNEY" PER FJ-65133-01.
2	8/23/99	CS	TRANFERRED (1) PAD-2 STB. PNL. W/ASSOC. CONN. (18) SPKR./STRBS., (19) STRBS. (6) RELAYS FOR DOOR RELEASE & (1) AREA SMK. DET. FROM TTB D-504304 TO TTB D-504948-21 ON 45TH FL. FOR "SOLOMON SMITH BARNEY" PER FIELD CONDITIONS OF FJ-65133.
1	8/23/99	CS	RISER REDRAWN. SEE DWG# E-504111-5 SH. 5 FOR REFERENCING PAST REVISIONS.

REV	DATE	BY	DESCRIPTION

OFFICE BUILDING
7 WORLD TRADE CENTER
N.Y.C.

CONTRACTOR | ENGINEER

PARTIAL RISER DIAGRAM
45TH FLOOR

DRN	L.H.
APPVD	
ENGR	C.S.
CKD	
DATE	7/2/99
SCALE	N.T.S.
SHEET	2
OF	2
REV	7

FIRECOM, INC. CASE/ACME
36-27 STREET
WOODSIDE, NEW YORK 11377

JOB# FJ-26840
DWG# E-504111-45

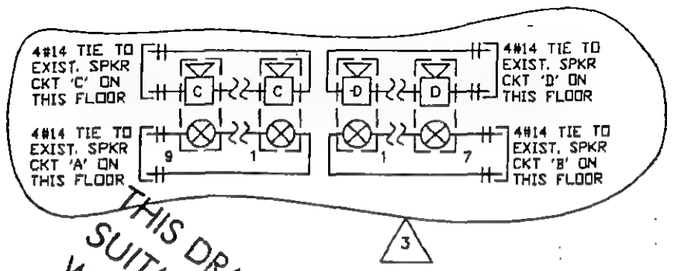

THIS DRAWING IS NOT SUITABLE FOR FILING WITH THE NYC FIRE DEPT. OR BUILDING DEPT.

TTB#19B
D-504323-A
ON THIS FL.

TTB#19A
D-504323-B
ON THIS FL.

NEW LOCATION — M/C 3#10

TTB#18B
D-504304
ON 45TH FL.

TTB#18A
D-504322
ON 45TH FL.

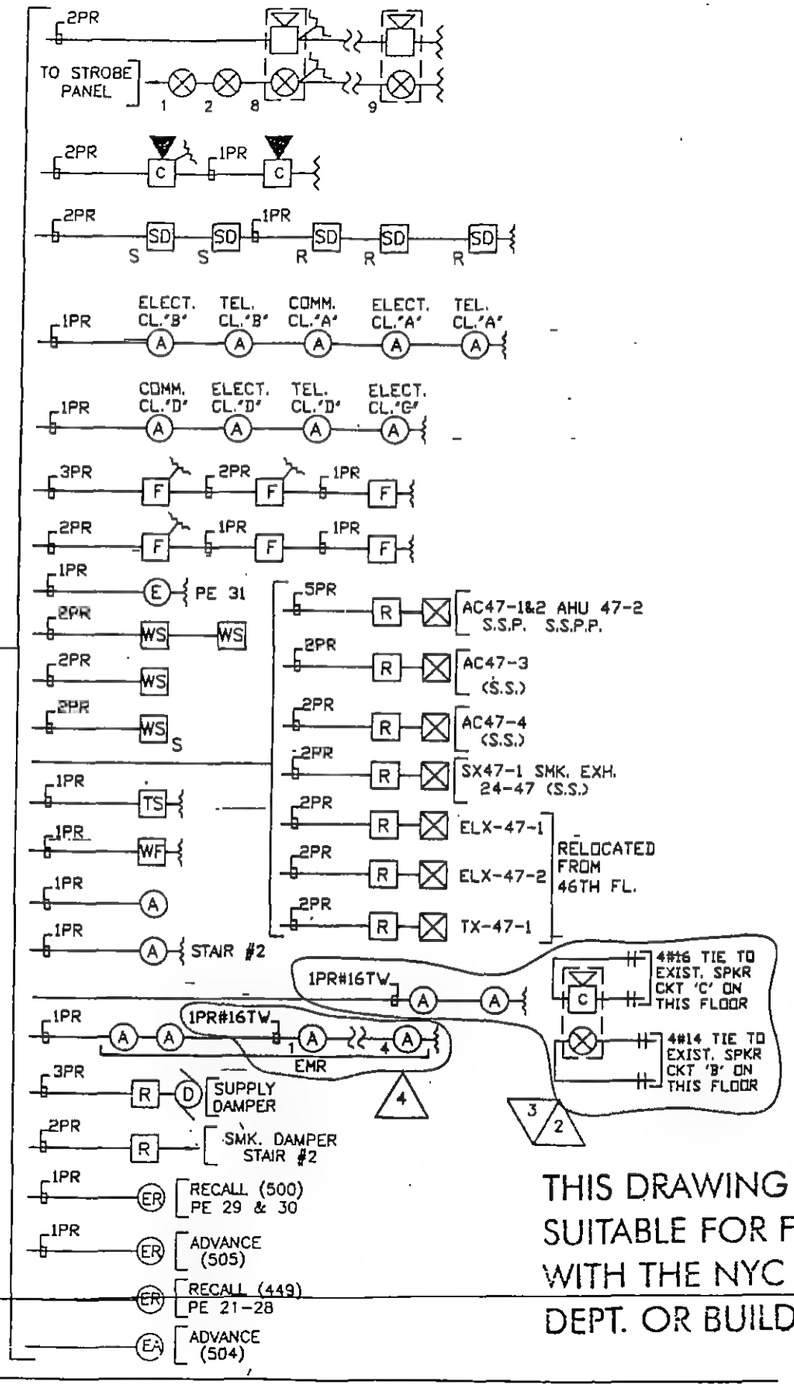

THIS DRAWING IS NOT SUITABLE FOR FILING WITH THE NYC FIRE DEPT. OR BUILDING DEPT.

47TH FLOOR

LEGEND

SYMBOL	DESCRIPTION
TTB	TRANSMISSION TERMINAL BOX
⊗	STROBE LIGHT
▷□⊗	COMB. SPKR/STROBE
▷□	SPEAKER F = FLUSH
(A)	AREA SMOKE DETECTOR
(E)	ELEVATOR LOBBY DETECTOR F = FLUSH
(H)	HEAT DETECTOR
SD	DUCT SMOKE DETECTOR S = SUPPLY R = RETURN
F/C	FUSE CUT-OUT
⊠	FAN SHUTDOWN
R	RELAY
(D)	DAMPER
DR	DOOR RELEASE
F	MANUAL STATION
WS	WARDEN STATION S = SURFACE F = FLUSH
	END OF LINE RESISTOR
▶□	STAIR SPEAKER
WF	WATERFLOW SWITCH
TS	TAMPER SWITCH
▷□◁	BI-DIRECTIONAL SPEAKER
ER	ELEVATOR RECALL JUNCTION BOX
(J)	JUNCTION BOX
EA	ELEVATOR ADVANCE

SEP 0.9 2000

4	09/08/00	JM	ADDED (4) AREA SMK. DETS. PER LJ-80393.
3	9/23/99	CS	CORRECTED FLOOR PAGE CKTS. FROM 'A' & 'B' TO 'C' & 'D' PER FIELD CONDITIONS.
2	9/9/98	CS	ADDED (2) AREA SMK. DETS. & (1) SPKR./STROBE ON 47TH FL. PER FJ-64637.
1	9/9/98	CS	RISER REDRAWN. SEE DWG# E-504111-5 FOR REFERENCING PAST REVISIONS.

REV	DATE	BY	DESCRIPTION

OFFICE BUILDING
7 WORLD TRADE CENTER
N.Y.C.

CONTRACTOR | ENGINEER

PARTIAL RISER DIAGRAM
47TH FLOOR

FIRECOM, INC.
CASE/ACME
WOODSIDE, NEW YORK 11377

DSN	L.H.
APP'D	
ENGR	C.S.
CKD	
DATE	9/9/98
SCALE	N.T.S.
SHEET	1
OF	2
JOB#	FJ-26840
DWG#	B-504111-47.
REV	4

124-5

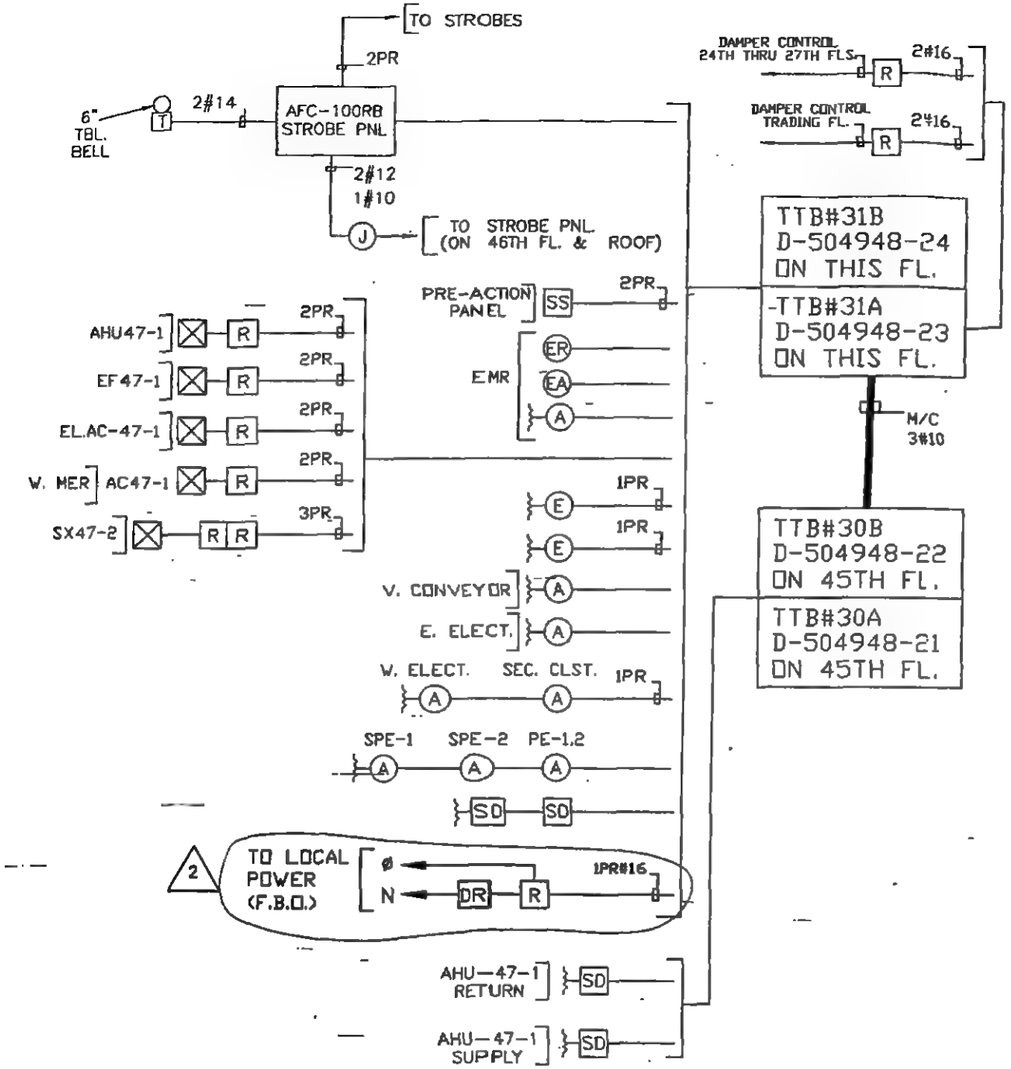

LEGEND	
SYMBOL	DESCRIPTION
TTB	TRANSMISSION TERMINAL BOX
⊗	STROBE LIGHT
▷□ ⊗	COMB. SPKR/STROBE
▷□	SPEAKER F = FLUSH
(A)	AREA SMOKE DETECTOR
(E)	ELEVATOR LOBBY DETECTOR F = FLUSH
(H)	HEAT DETECTOR
SD	DUCT SMOKE DETECTOR S = SUPPLY R = RETURN
F/C	FUSE CUT-OUT
⊠	FAN SHUTDOWN
R	RELAY
(D)	DAMPER
DR	DOOR RELEASE
F	MANUAL STATION
WS	WARDEN STATION S = SURFACE F = FLUSH
⊣	END OF LINE RESISTOR
▶□	STAIR SPEAKER
WF	WATERFLOW SWITCH
TS	TAMPER SWITCH
▷□◁	BI-DIRECTIONAL SPEAKER
(ER)	ELEVATOR RECALL JUNCTION BOX
(J)	JUNCTION BOX
(EA)	ELEVATOR ADVANCE

47TH FLOOR

REV	DATE	BY	DESCRIPTION
2	05/05/00	JM	ADDED (RELAY FOR DOOR RELEASE ON 47TH FL. PER LJ-80208.
1	9/9/98	JM	RISER REDRAWN. SEE DWG# E-504111-5 FOR REFERENCING PAST REVISIONS.

OFFICE BUILDING
7 WORLD TRADE CENTER
N.Y.C.

CONTRACTOR | ENGINEER

PARTIAL RISER DIAGRAM
47TH FLOOR

FIRECOM, INC. CASE/ACME
38-27 STREET
WOODSIDE, NEW YORK 11377

DRN	L.H.
APPVD	
ENGR	C.S.
CKD	
DATE	9/9/98
SCALE	N.T.S.
SHEET	2
OF	2
REV	2
JOB#	FJ-26840
DWG#	E-504111-47

QTY	SYMBOL	DESCRIPTION	CAT. NO	BSA NO.	WIRE SIZE
	(A) (B)	FLOOR SPEAKER LETTER (A,B) INDICATES CKT. F = FLUSH W = 25Ø-CVR. S = SURFACE (BRACKET MTD.) BI-DIR.	6348-11 6349-11 7545-11 6343-2	379-73-SA	1 PR @ 16 TW
	(A) (B)	STAIR SPEAKER LETTER (A,B) INDICATES CKT.	6340-11	379-73-SA	1 PR @ 16 TW
	(E)	ELEVATOR LOBBY SMOKE DETECTOR S = SURFACE F = FLUSH	PID-C	840-76-SA	1 PR @ 18 TW/SH
	(A)	AREA SMOKE DETECTOR S = SURFACE F = FLUSH	PID-C	840-76-SA	1 PR @ 18 TW/SH
	(SD)	DUCT SMOKE DETECTOR S = SUPPLY R = RETURN	AL-DH1	840-76-SA	1 PR @ 18 TW/SH
	(H)	AREA HEAT DETECTOR	DT-135R	858-72-SA	1 PR @ 20 TW
	(HD)	DUCT HEAT DETECTOR	DTD-6	378-73-SA	1 PR @ 20 TW
	(CD)	COMBIN. SMOKE & HEAT DETECTOR SURFACE MTD			1 PR @ 18 TW/SH
	(M)	MANUAL STATION S = SURFACE F = FLUSH	270	375-73-SA	1 PR @ 20 TW
	(WS)	WARDEN STATION PR = PUMP ROOM S = SURFACE F = FLUSH	250-11 254-11	379-73-SA	1 PR @ 20 TW/SH 1 PR @ 20 TW
	(MWS)	COMBIN. MANUAL & WARDEN STATION S = SURFACE F = FLUSH	210	379-73-SA	2PR @ 20 TW, 1 PR @ 20 TW/SH 1 PR @ 18 TW
	WF	WATERFLOW SWITCH			1 PR @ 20 TW
	TS	TAMPER SWITCH			1 PR @ 20 TW
	SD	SUB-SYSTEM	F.B.O.		1 PR @ 20 TW
	(TTB)	TRANSMISSION TERMINAL BOX SURFACE MTD		379-73-SA	SEE WIRING DIAGRAM
	(ANN1)	REMOTE ANNUNCIATOR S = SURFACE F = FLUSH	CR-251	379-73-SA	2 PR @ 18, 1 PR @ 20 TW 1 PR @ 20 TW/SH
	(ANN2)	REMOTE ANNUNCIATOR	9000	379-73-SA	1 PR @ 20 TW/SH, 1 PR @ 20 TW 3 PR @ 22 TW/SH, 1 PR @ 12
	PS	POWER SUPPLY RACK		379-73-SA	SEE WIRING DIAGRAM
	AMP	AMPLIFIER RACK		379-73-SA	SEE WIRING DIAGRAM
	FCS	FIRE COMMAND STATION	8510/8520	379-73-SA	SEE WIRING DIAGRAM
		FAN CONTROL (START STOP STATUS)	F.B.O.		2 PR @ 14 1 PR @ 16 (interw)
	(R)	INTERFACE RELAY (ONE PER FUNCTION)			1 PR @ 20 TW
	(EB)	ELEVATOR RECALL JUNCTION BOX	F.B.O.		1 PR @ 16
	FOC	FUSE CUTOUT BOX			
		STROBE LIGHT			
	(D)	DAMPER CONTROL	F.B.O		1 PR @ 16
		END OF LINE RESISTOR FOR SPEAKER CIRCUITS USE 4.7K FOR MANUAL, WARDEN, SMOKE DETECTOR AND OTHERS USE 1.8K			

NOTE: FOR TENANT WIRING OF SPKRS & STROBES CONNECTION REFER TO DWG. 6.103.14

NOTE:
FOR CROSSED-OUT FLOORS SEE DWG. # B-504111-01,07,02,

23	5/2/00	JM	ADDED (1) DELAY FOR DOOR RELEASE ON THE FOLLOWING FLOORS: 3RD THRU 5TH PER FJ-82086.
22	11/19/98	CS	ADDED (1) RACK 3 SMOKE DET. & (1) DELAY FOR FAN SHUTDOWN ON 3RD FL. PER FJ-82477.
21	11/20/96	CS	ADDED (1) DELAY FOR DOOR RELEASE ON THE 3RD FL. PER FJ-82217.
20	7/7/96	LG	ADDED (2) SMOKE DET. ON 3RD FL PER FJ-63096
19	6/14/96	LG	ADDED (4) SPKRS/STROBES TO EXISTING CKTS ON 3RD FL PER FJ# 63046
18	4/18/96	LE	ADDED (5) SPKRS & (5) STROBES TO EXISTING CKTS ON 3RD FL. (2) DUCT DET. (2) FAN SHUTDOWN & (1) AREA SMK. DETECTOR ON 3RD FL. PER FJ-82482.
17	3/9/95	TT	ADDED (6) STROBES ON 10TH FL PER #2-61990-01
16	10/27/94	TT	ADDED STAIR SPKRS & STROBES, MONITOR, (7) SPEAKER STROBES, (8) J-BOXES, (3) DUCT DET., (3) RELAY FOR FAN SHUTDOWN, (3) DELAY FOR DOOR RELEASE, (4) AREA SMK DETECTORS, (1) FIRE ALARM CONTROL MODULE, (1) DUCT DET. (1) DELAY FOR FAN SHUTDOWN, (1) DELAY FOR DOOR RELEASE, (2) AREA SMK. DETECTORS ON 3RD FL PER FJ-82478-01
15	9/20/94	TT	ADDED (3) SPEAKERS AND (3) STROBES ON 8TH FLOOR AS PER FJ-61483
14	1/28/94	LE	ADDED RELAYS TO DOOR RELEASE SYSTEM ON 7TH & 8TH FLOORS AS PER FJ-61936
13	12/22/93	TT	REVISED PER AS BUILT
12	12/29/93	TT	ADDED AFC 101 W/ASSC 4 STROBES 5 SPKRS, 1 HEAT DET, 1 DUCT DETECTOR & 1 DELAY FOR FAN SHUTDOWN ON 8TH FL. ADDED AFC 101 W/ASSC 14 STROBES, 9 SPKRS; FOR SYSTEM, MANUAL STATION, DUCT DET. FAN SHUTDOWN PER FJ 6453
11	1/4/93	BD	ADDED POWER SUPPLY & TTB RISER AS PER FJ-60744.
10	9/10/92	TS	ADDED DOOR RELEASE ON 3RD FL PER FJ-60710 (SALOMON BROTHERS INC.)
9	5/5/92	BD	ADDED DOOR RELEASE RELAY ON 8TH FL. PER FJ-60197
8	4/21/92	BD	ADDED WATERFLOW (2) & TAMPER SWITCH W/ALL ZONES ON 10TH FL. PER FJ-60044.
7	6/10/91	BD	ADDED AFC-100, P/O, 6" T-SPLY ON 6TH FL. PER FJ-58476.
6	04/04/91	BD	ADDED TTB, RELAY ON 6TH FL. ANNUNCIATOR, PRESSURE SYSTEM, RELAY (PURGE) ON 4TH FL. RELAY (PRESS) ON 3RD FL. RELAY (PURGE) ON 2ND FLOOR PER FJ-58693 - 16.
5	10/10/90	BD	ADDED 2 DET. IFC 1, 2 MS-2 ZONE, 1 STROBE 2 PEL 1 MS-4 SPK/STROBE 3RD FL. 1 MS-4 & 1 SPK/STROBE 5TH FL. FJ-58747
4	6-21-90	BD	ADDED 2 DET. IFC 1, 2 MS-2 ZONE, 1 STROBE 2 PEL 1 MS-4 SPK/STROBE 3RD FL. 1 MS-4 & 1 SPK/STROBE 5TH FL. FJ-58747
3	6-21-90	BD	ADDED 2 DELAY RELEASE ON 3RD FL PER FJ-58693
2	6-4-90	TP	REVISED PER RETURN SUBMISSION
1	10-25-89	TP	REVISED PER FJ-58889
		TP	REDRAWN / GENERAL REVISION
REV.	DATE.	BY	DESCRIPTION

7 WORLD TRADE CENTER
NEW YORK, NEW YORK
10TH FL. — 1ST FL.

FIRE ALARM SYSTEM
RISER DIAGRAM

DWN. SJ
APPVD.
ENGR. JP
CKD.
DATE 5-16-89
SCALE

FIRECOM INCORPORATED
☐ FIRE CONTROLS DIV.
☐ COMMERCIAL RADIO-SOUND DIV.

JOB NO. FJ-26840
DWG. E-504111-1
SHEET 23 OF 25

WTCI-124-S

QTY	SYMBOL	DESCRIPTION	CAT. NO	BSA NO.	WIRE SIZE
	A / B	FLOOR SPEAKER LETTER (A,B) INDICATES CKT. F = FLUSH W = WALL-BKR. S = SURFACE (BRACKET MTD.) R=BKR.	6348-11 6343-11 6345-11 6343-R	379-73-SA	1 PR @ 18 TW
	A / B	STAIR SPEAKER LETTER (A,B) INDICATES CKT.	6345-11	379-73-SA	1 PR @ 16 TW
	E	ELEVATOR LOBBY SMOKE DETECTOR S = SURFACE F = FLUSH	PID-C	840-76-SA	1 PR @ 18 TW/SH
	A	AREA SMOKE DETECTOR S = SURFACE F = FLUSH	PID-C	840-76-SA	1 PR @ 18 TW/SH
	SD	DUCT SMOKE DETECTOR S = SUPPLY R = RETURN	AL-DH1	840-76-SA	1 PR @ 18 TW/SH
	H	AREA HEAT DETECTOR	DF-1BBR	256-72-SA	1 PR @ 20 TW
	HD	DUCT HEAT DETECTOR	DTD-4	378-73-SA	1 PR @ 20 TW
	CD	COMBIN. SMOKE & HEAT DETECTOR SURFACE MTD.			1 PR @ 18 TW/SH
	M	MANUAL STATION S = SURFACE F = FLUSH	250	378-73-SA	1 PR @ 20 TW
	WS	WARDEN STATION PR = PUMP ROOM S = SURFACE F = FLUSH	255-11 256-11	379-73-SA	1 PR @ 20 TW/SH 1 PR @ 20 TW
	MWS	COMBIN. MANUAL & WARDEN STATION S = SURFACE F = FLUSH	215	379-73-SA	2 PR @ 20 TW, 1 PR @ 20 TW/SH 1 PR @ 18 TW
	WF	WATERFLOW SWITCH			1 PR @ 20 TW
	TS	TAMPER SWITCH			1 PR @ 20 TW
	SS	SUB-SYSTEM	F. B. O.		1 PR @ 20 TW
	TTB	TRANSMISSION TERMINAL BOX SURFACE MTD.		379-73-SA	SEE WIRING DIAGRAM
	ANN I	REMOTE ANNUNCIATOR S = SURFACE F = FLUSH	CR-250	379-73-SA	2 PR @ 18, 1 PR @ 20 TW 1 PR @ 20 TW/SH
	ANN II	REMOTE ANNUNCIATOR	9000	379-73-SA	1 PR @ 20 TW/SH, 1 PR @ 20 TW 2 PR @ 18 TW/SH, 2 PR @ 12
	PS	POWER SUPPLY RACK		379-73-SA	SEE WIRING DIAGRAM
	AMP	AMPLIFIER RACK		379-73-SA	SEE WIRING DIAGRAM
	FCS	FIRE COMMAND STATION	850/8520	379-73-SA	SEE WIRING DIAGRAM
		FAN CONTROL (START, STOP, STATUS)	F. B. O.		2 PR @ 18 1 PR @ 18 (alarms)
	R	INTERFACE RELAY (ONE PER FUNCTION)			1 PR @ 20 TW
	ER	ELEVATOR RECALL JUNCTION BOX	F. B. O.		1 PR @ 18
	T/C	FUSE CUTOUT BOX			
		STROBE LIGHTS			
		115 MOTS LAMP			
	AFC	AFC-1 AND PULL STATION LAMPS THRU 15 FL PER REFER DWG E-503454			
		END-OF-LINE RESISTOR FOR SPEAKER CIRCUITS USE 4.7K FOR MANUAL, WARDEN, SMOKE DETECTOR AND OTHERS USE 1.8K			
		COMB. HTR/STROBE			

NOTE: FOR TENANT WIRING SPKRS & STROBES CONNECTION REFER TO DWG E-503454

NOTE:
FOR CROSSED-OUT FLOORS SEE DWG. # B-504111-13, 20

REV.	DATE	BY	DESCRIPTION
18	11/5/97	CS	ADDED (1) DUCT SMOKE DET. & (1) RELAY FOR FAN SHUTDOWN ON 18TH FL. PER FJ-69417
17	12/9/96	T.T.	ADDED (2) SPEAKER-STROBES & (1) DUCT SMOKE DETECTOR & FAN SHUTDOWN ON 18TH FLOOR PER FJ-63401
16	4/24/96	L.E	ADDED (2) DUCT DETECTORS (2) RELAYS FOR FAN SHUTDOWN ON 20TH FL PER FJ-62062
15	2/14/96	L.G	ADDED (2) SPKR./STROBES (3) STROBE LIGHTS (1) RELAY FOR FAN SHUTDOWN (1) DUCT DET. (1) RELAY FOR DOOR REL. ON 19TH FL PER FJ-62479
14	8/12/95	L.G	ADDED (2) SPKR./STROBES (1) WATERFLOW ON 20TH FL PER FJ-62449
13	9/07/94	LE	DELETED (1) SPKR. & (1) STROBE ON 15TH FL. ADDED (1) SPKR./STROBE ON 15TH FLOOR PER FJ-62413-01 FOR S.E.C.
12	7/7/95	LE	ADDED (1) SPKR-STROBE AND (1) STROBE TO EXISTING CIRCUIT ON 15TH FLOOR PER FJ-62413.
11	4/28/95	JD	ADDED (1) COMB-SPKR./STROBE AND (1) STROBE TO EXISTING CIRCUITS ON 15TH FLOOR PER FJ-62226.
10	6-14-93	VL	ADDED DOOR RELEASE RELAY 18TH FLOOR PER FJ-60911-01
9	1-11-93	JPE	ADDED AFC-101, 3/4 SPEAKER/STROBE, AREA DET & RELAY, PULL DOOR RELEASE ON 11TH FLOOR. ADDED (2) AFC-101, (2) SPEAKER/STROBE, AREA DETECTORS, RELAY, PULL DOOR RELEASE, DUCT DETECTOR, FAN SHUTDOWN, 2 TTB SYSTEM, SPEAKER-STROBE ON 14TH FLOOR. ADDED AFC-101, (2) SPEAKER-STROBES, (2) AREA DET. (2) FAN SHUTDOWN ON 15TH FLOOR. PER FJ-60956.
8	10-15-92	BD	ADDED TTB #85 & #86 PER FJ-60644.
7	9/23/92	BD	REVISED FJ-60656 PER RETURNED SUBMISSION.
6	9/3/92	BD	ADDED (2) AFC-101, 3/4 SPEAKER/STROBE, AREA DET & RELAY, PULL DOOR RELEASE ON 11TH FLOOR. ADDED (2) AFC-101, (2) SPEAKER/STROBE, AREA DETECTORS, RELAY, PULL DOOR RELEASE, DUCT DETECTOR, 2 TTB SYSTEM, SPEAKER-STROBE ON 14TH FLOOR. ADDED AFC-101, (2) SPEAKER-STROBES, (2) AREA DET. (2) FAN SHUTDOWN ON 15TH FLOOR. PER FJ-60956.
5	4/16/91	BD	ADDED AREA DET. ON 18TH FL. FJ-60151.
4	8/15/91	BD	ADDED CONFIRMATION STROBE/STROBE (2) ON 14TH FL & (6) ON 20TH FL AS PER FT-24865-02.
3	4/24/91	BD	ADDED FAN SHUTDOWN, DUCT DET, TTB, STROBE PER FJ 23966.
2	11/0990	B.D.	ADDED 3/4 FN'L SPKRS/STROBES, FAN SHUTDOWN ON 14 TO THRU 18 FL, 2ND B-SYSTEM TO 14TH FL. PER FJ-23466
1		TP	REDRAWN/GENERAL REVISION

7 WORLD TRADE CENTER
NEW YORK, NEW YORK
11TH - 20TH FL.

FIRE ALARM SYSTEM
RISER DIAGRAM

DWN. SJ
APPVD.
ENGR. J P
CKD.
DATE 5-6-88
SCALE

FIRECOM INCORPORATED
☐ FIRE CONTROLS DIV.
☐ COMMERCIAL RADIO-SOUND DIV.

JOB NO. FJ-26840
DWG E-504112 REV 18

QTY	SYMBOL	DESCRIPTION	CAT. NO	BSA NO	WIRE SIZE
	A / B	FLOOR SPEAKER LETTER (A,B) INDICATES CKT. F = FLUSH W = WALL-MTR. S = SURFACE (BRACKET MTD.) BH-DAR.	6348-11 6343-11 6345-11 6343-18	379-73-5A	1 PR @ 16 TW
	A / B	STAIR SPEAKER LETTER (A,B) INDICATES CKT.	6345-11	379-73-5A	1 PR @ 16 TW
	E	ELEVATOR LOBBY SMOKE DETECTOR S = SURFACE F = FLUSH	P12-C	840-76-5A	1 PR @ 18 TW/SH
	A	AREA SMOKE DETECTOR S = SURFACE F = FLUSH	P12-C	840-76-5A	1 PR @ 18 TW/SH
	SD	DUCT SMOKE DETECTOR S = SUPPLY R = RETURN	AL-DH1	840-76-5A	1 PR @ 18 TW/SH
	H	AREA HEAT DETECTOR	ST-1384	258-72-5A	1 PR @ 20 TW
	HD	DUCT HEAT DETECTOR	370-6	378-73-5A	1 PR @ 20 TW
	SD	COMBIN. SMOKE & HEAT DETECTOR SURFACE MTD.			1 PR @ 18 TW/SH
	M	MANUAL STATION S = SURFACE F = FLUSH	230	378-72-5A	1 PR @ 20 TW
	WS	WARDEN STATION PR = PUMP ROOM S = SURFACE F = FLUSH	250-11 254-11	379-73-5A	1 PR @ 20 TW/SH
	MWS	COMBIN. MANUAL & WARDEN STATION S = SURFACE F = FLUSH	215	379-73-5A	2 PR @ 20TW, 1 PR @ 20TW/SH 1 PR @ 18 TW
	WF	WATERFLOW SWITCH			1 PR @ 20 TW
	TS	TAMPER SWITCH			1 PR @ 20 TW
	SS	SUB-SYSTEM	F.B.O.		1 PR @ 20 TW
	TTB	TRANSMISSION TERMINAL BOX SURFACE MTD.		379-73-5A	SEE WIRING DIAGRAM
	RANI	REMOTE ANNUNCIATOR S = SURFACE F = FLUSH	CR-251	379-73-5A	2 PR @ 16, 1 PR @ 20 TW 1 PR @ 20 TW/SH
	RANII	REMOTE ANNUNCIATOR	9000	379-73-5A	1 PR @ 20 TW/SH, 1 PR @ 20 TW 3 PR @ 12 TW/SH, 2 PR #12
	PS	POWER SUPPLY RACK		379-73-5A	SEE WIRING DIAGRAM
	AMP	AMPLIFIER RACK		379-73-5A	SEE WIRING DIAGRAM
	FCS	FIRE COMMAND STATION	850/8520	379-73-5A	SEE WIRING DIAGRAM
		FAN CONTROL (START_STOP_STATUS)	F.B.O.		2 PR @ 18 1 PR @ 18 (status)
	R	INTERFACE RELAY (ONE PER FUNCTION)			1 PR @ 20 TW
	EM	ELEVATOR RECALL JUNCTION BOX	F.B.O.		1 PR #16
	F/C	FUSE CUTOUT BOX			
		STROBE LIGHT ⊗			1 PR # 14
		COMB. SPKR./STROBE			1 PR # 14
		END OF LINE RESISTOR FOR SPEAKER CIRCUITS USE 4.7K FOR MANUAL, WARDEN, SMOKE DETECTOR AND OTHERS USE 1.8K			

NOTE: FOR TENANT WIRING SPKRS & STROBES CONNECTION REFER TO DWG 6A103.11A

NOTE: FOR CROSSED-OUT FLOORS SEE DWG. # B-504111-23, 30, 24, 22,

REV.	DATE	BY	DESCRIPTION
33	5/4/00	JM	ADDED (1) RELAY FOR DOOR RELEASE ON THE FOLLOWING FLOORS 21ST & 25TH THRU 30 PER L.L. 5/2000.
32	4/22/98	CS	ADDED (3) SPKR./STROBES ON THE 22ND FL., PER FJ-64400.
31	8/15/97	CS	ADDED (1) STROBE LIGHT ON 21ST FL PER FJ-63964
30	7/22/97	CS	ADDED (4) SPEAKERS & (6) STROBES ON 25TH FL PER FJ-63827
29	5/20/97	T.T.	ADDED (1) SPKR/STROBE ON 21ST FL. PER FJ-63762
28	4/9/97	LE	ADDED (4) SPKRS./STROBES ON 21ST FLOOR PER FJ-63685 FOR "SOLOMON BROS" (F&D).
27	4/7/97	CS	ADDED (1) RELAY FOR DOOR RELEASE ON 21ST FL PER FJ-63677
26	9/13/96	L.G.	ADDED (1) SPKR ON 21ST FL PER FJ-63243
25	7/9/96	JD	ADDED (4) SPKRS./STROBES, (4) STROBES, (2) TROUBLE TO 21ST CKT. ADDED (1) WATERFLOW DET., (1) MANUAL PULL & (1) STROBE ON 21ST FLR. FOR PUMP ROOM WHICH PER FJ-63126.
24	9/7/96	LE	ADDED (3) SPKRS./STROBES (1) STROBE ON 22ND FLOOR PER FJ-61471 FOR "FEDERAL HOME"
23	3/27/96	TT	ADDED (2) COMB. SPKR/STRBS., (1) DUCT DET., (1) 24.0V AUX FAN SHUTDOWN ON 21ST FLOOR AS PER FJ-62858
22	1/16/96	JD	ADDED PREACTION PANEL TBL. AND ALARM ON 26TH FLOOR SEE AS BUILT.
21	1/10/96	JD	ADDED (6) STROBES ON 25TH & 27TH FL. PER FJ 62532 -02.
20	1/9/96	JD	REVISED UPS SYSTEM TO PREACTION ALARM & TROUBLE DESIG. PER FJ-62532-01.
19	10/19/95	JD	ADDED DUCT SMOKE DET. W/ASSOC. FAN SHUT/STOP ON 25TH & 27TH FLOORS PER FJ-62532-01 FOR STD. CHARTERED BANK
18	9/13/95	JD	PER FJ-62532 SEE FIN & 27TH FLOOR. ADDED STROBE PANEL WITH ASSOCIATED ATTENDED WORK. ADDED 2 SPEAKERS TO EXISTING CIRCUIT ADDED 2 STROBES TO EXISTING CIRCUIT ADDED (2) DUCT DETECTORS WITH ASSOCIATED FAN SHUTDOWN RELAYS ON 25TH FLOOR. ADDED (1) DUCT DETECTOR ON 27TH FLOOR. ADDED NEW ZONE FOR DUCT DETECTOR. (1) FAN SHUTDOWN, WF & TAMPERS. ADD (1) REACT PNL. ALM & TBL.
17	5/10/94	L.E.	ADDED PRE-ACTION PANEL ON 22ND FLOOR AS PER FJ-61655-01
16	4/21/94	L.E.	ADDED (3) STROBE PULL W/ ASSOC. (3) STROBES, (3) TROUBLE BELLS (2) FLOW CUT-OUT. ALSO ADDED (5) SMK. DUCT DETS., (5) FAN SHUTDOWN AND PRE-ACTION PANEL PER ALARM DETAIL ON 22ND FL. PER FJ-61655
15	3/24/93	T.D.	ADDED (10) COMBINATION SPEAKERS/STROBES ON 28TH FLR. FOR SOLOMON BROTHERS PER FJ-61246-03
14	1/21/93	L.E.	REPLACED (3) DUCT DETS WITH COMB. SMOKE/HEAT DET. ON 28TH FLR AS PER FJ-61256-04
13	8-31-93	A.S.	ADDED (6) COMB. SPKR./STROBES TO EXIST. CKTS.
12	1/4/93	B.D.	ADDED (4) DUCT SMK DET ON NEW ZONE & (1) RELAY FOR FAN SHUTDOWN AS PER L.L. 5/92 PER FJ-61296 ON 28TH FL.
11	10/30/92	A.S.	ADDED TTB PANEL AS PER FJ-60244.
10	8/25/92	B.D.	ADDED (2) SMOKE DETECTOR ON 25TH FL PER FJ-60228.
9	7/22/92	B.D.	ADDED AREA. DET. ON 21ST FL. AS PER FJ-24865-09
8	4/22/92	B.D.	ADDED DRUM SYSTEM PRECATION PANEL ON 28TH FL AS PER FJ-24914.
7	4/9/92	B.D.	ADDED 2PR #16 TP, 1PR #16 TBELL, 1PR #16 WF, 1PR #16 SPKR/STROBES ON 21ST FL. AS PER FJ-24865.
6	11-12-90	B.D.	ADDED PRE-ACTION SYST. ON 23RD FL THRU 32ND FL 34TH, 35TH, 38TH FL. THRU 47TH FL & 49TH FL PER FJ-23823
5	6-21-90	B.D.	ADDED (7) SPKRS/STROBES ON 30TH FL PER FJ 23818
4	6/19/90	B.D.	ADDED (7) STROBES/STROBE ON 25TH FL PER FJ 23689
3	6-21-89	B.D.	ADDED DOOR RELEASE ON 23 TH FL PER FJ 23823
2	4-4-89	T.P.	REVISED FIRE ALARM SUBMISSION
1	10-27-88	T.P.	REVISED PER FT-23823
		J.T.	RED RAIN / GENERAL REVISION

7 WORLD TRADE CENTER
NEW YORK, NEW YORK
21ST FL - 30TH FL.

FIRE ALARM SYSTEM
RISER DIAGRAM

FIRECOM INCORPORATED
☐ FIRE CONTROLS DIV.
☐ COMMERCIAL RADIO SOUND DIV.

DWN. SJ
APPVD.
ENGR. JT
CHD.
DATE 2-6-89
SCALE NONE
JOB NO. FJ-22844
DWG. NO. E-504295 33

124-5

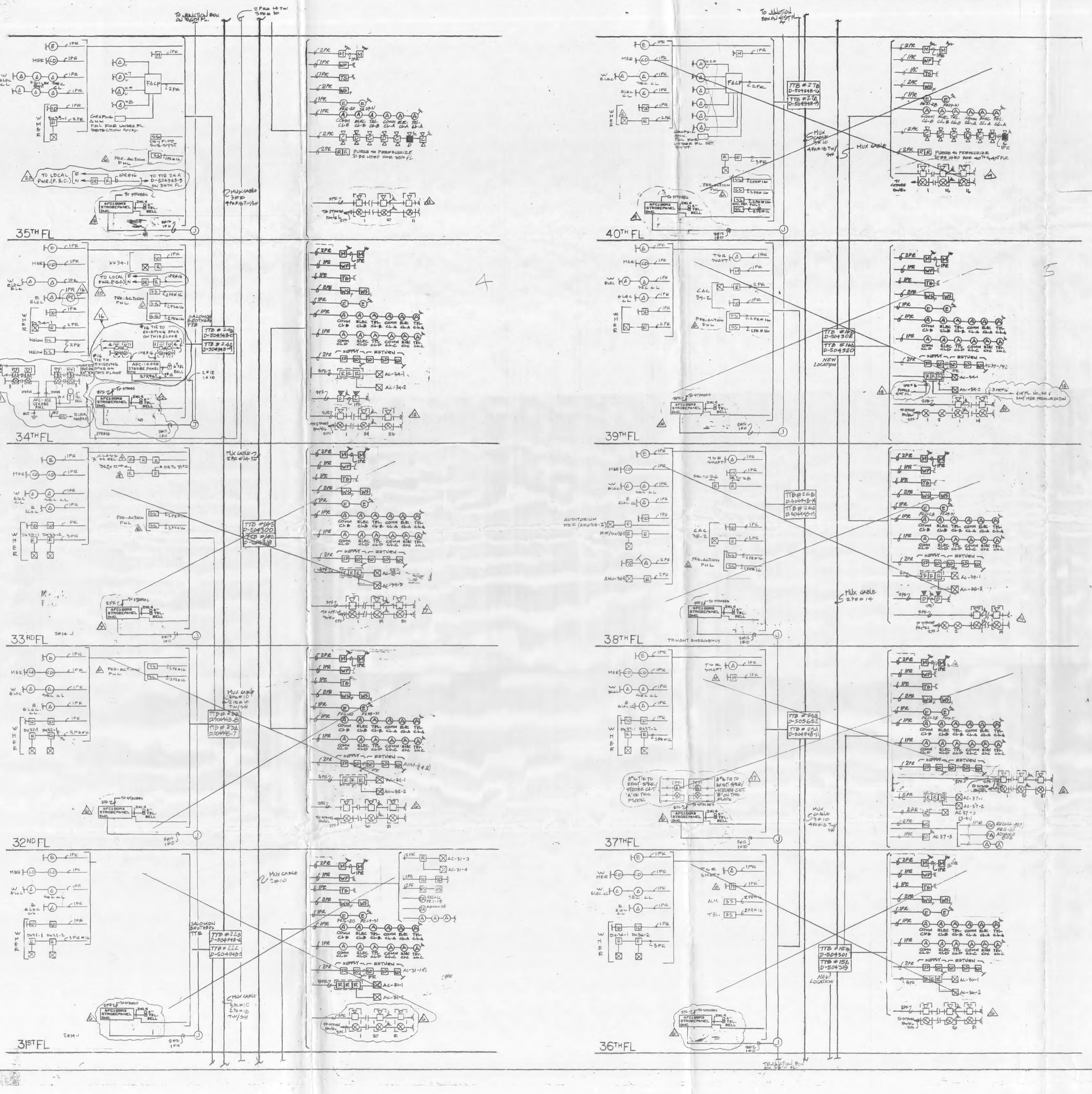

QTY	SYMBOL	DESCRIPTION	CAT. NO.	SEA - NO.	WIRE SIZE
	A	FLOOR SPEAKER LETTER (A,B) INDICATES CKT. F = FLUSH W = WALL-CONC. S = SURFACE (BRACKET MTD.) B = BOX.	6348-11 6345-11 6345-12 6343-12	379-73-5A	1 PR @ 18 TW
	A B	STAIR SPEAKER LETTER (A,B) INDICATES CKT.	6345-11	379-73-5A	1 PR @ 18 TW
	E	ELEVATOR LOBBY SMOKE DETECTOR S = SURFACE F = FLUSH	P10-C	840-76-5A	1 PR @ 18 TW/SH
	A	AREA SMOKE DETECTOR S = SURFACE F = FLUSH	P10-C	840-76-5A	1 PR @ 18 TW/SH
	SD	DUCT SMOKE DETECTOR S = SUPPLY R = RETURN	AL-DH	840-76-5A	1 PR @ 18 TW/SH
	H	AREA HEAT DETECTOR	DT-135R	856-72-5A	1 PR @ 20 TW
	HD	DUCT HEAT DETECTOR	DTD-4	378-73-5A	1 PR @ 20 TW
	CD	COMBIN. SMOKE & HEAT DETECTOR SURFACE MTD.			1 PR @ 18 TW/SH
	M	MANUAL STATION S = SURFACE F = FLUSH	230	378-73-5A	1 PR @ 20 TW
	WS	WARDEN STATION PR = PUMP ROOM S = SURFACE F = FLUSH	250-11 254-11	378-73-5A	1 PR @ 20 TW/SH 1 PR @ 20 TW
	MWS	COMBIN. MANUAL & WARDEN STATION S = SURFACE F = FLUSH	215	378-73-5A	2 PR @ 20 TW, 1 PR @ 20 TW/SH 1 PR @ 18 TW
	WF	WATERFLOW SWITCH			1 PR @ 20 TW
	TS	TAMPER SWITCH			1 PR @ 20 TW
	SD	SUB-SYSTEM	F. B. O.		1 PR @ 20 TW
	TTB	TRANSMISSION TERMINAL BOX SURFACE MTD.		379-73-5A	SEE WIRING DIAGRAM
	RANN	REMOTE ANNUNCIATOR S = SURFACE F = FLUSH	CR-2B	379-73-5A	2 PR @ 18, 1 PR @ 20 TW 1 PR @ 20 TW/SH
	RANN	REMOTE ANNUNCIATOR	9000	379-73-5A	1 PR @ 22 TW/SH, 1 PR @ 20 TW 2 PR @ 22 TW/SH, 2 PR @ 18
	PS	POWER SUPPLY RACK		379-73-5A	SEE WIRING DIAGRAM
	AMP	AMPLIFIER RACK		379-73-5A	SEE WIRING DIAGRAM
	FCS	FIRE COMMAND STATION	8510/8520	379-73-5A	SEE WIRING DIAGRAM
		FAN CONTROL (START, STOP, STATUS)	F. B. O.		2 PR @ 18 1 PR @ 18 (status)
	R	"INTERFACE RELAY" (ONE PER FUNCTION)			1 PR @ 20 TW
	EA	ELEVATOR RECALL JUNCTION BOX	F. B. O.		1 PR @ 18
	FJC	FUSE CUTOUT BOX			
		STROBE LIGHTS			
		END OF LINE RESISTOR FOR SIGNAL CIRCUITS USE 4.7K FOR MANUAL, WARDEN, SMOKE DETECTOR AND OTHERS USE 1.8K			

NOTE: FOR TENANT WIRING OF SPKRS/STROBES CONNECTION REFER TO DWG. E-1013114

NOTE: FOR CROSSED-OUT FLOORS SEE DWG. # E-504111-39,37, 38,40,31,32,33,36,

REV	DATE	BY	DESCRIPTION
20	5/4/00	JM	ADDED (1) RELAY FOR DOOR RELEASE ON THE FOLLOWING FLOORS 34TH & 35TH FL'S PER FJ-80205.
19	5/28/97	TT	ADDED NEW AFC-102 STROBE PNL ((16) SPEAKER/STROBES ON 34TH FL. PER FJ-65788.
18	9/8/97	JD	ADDED CONNECTIONS FOR PRESSURIZATION/PURGE ON 35TH FL. PER FJ 80110.
17	9/6/94	JD	ADDED (6) SPKRS/STROBES TO EXIST. CKT. ON 34TH FLOOR PER FJ-62066.
16	8-31-93	AS	ADDED STROBE PANEL & B-COMB/SPKR STROBES & I.R.E. DETECTOR ON 34TH FLOOR AS PER FJ-61296 AND FJ-61296-08
15	9-17-90	BD	ADDED 14 COMB/SPEAKERS/STROBES ON 35TH FL & 19 COMB/SPKRS/STROBES ON 39TH FL PER FJ-27482
14	7-9-90	BD	ADDED MANUAL STATION ON 36TH, 37TH FL PER FJ 29037
13	7-9-90	BD	ADDED 11 SPKRS/STR. ON 35TH FL PER FJ-27483
12	"	"	ADDED 23 SPKRS/STROBES ON 34TH FL PER FJ-27490
11			
10	7-9-90	BD	ADDED 19 SPKRS/STROBES ON 32ND, 37TH FL PER FJ-29497
9	7-9-90	BD	ADDED 14 SPKRS/STROBES ON 40TH FL PER FJ-1277
8			
7	6-21-90	BD	ADDED 20 SPEAKER/STROBES ON 38TH FL PER FJ-29499
6	6-21-90	BD	ADDED 19 SPEAKER/STROBES ON 33RD, 36TH FLOORS PER FJ-29505
5	6-1-90	BD	CLOSED DOOR RELEASE RELAYS (PER DWG #8-77)
4	6-21-90	BD	ADDED DOOR RELEASE ON 32ND & 35TH FLOORS FJ-29253
3	4-6-90	JF	REVISED PEC RETURN SUBMISSION
2	4-17-90	TT	REVISED PER CONTRACT DWG C-340 ON 40TH FLR. PER FT-29029
1	12-1-89	TT	REVISED PER FT-28888
	11-21-89	TT	REDRAWN / GENERAL REVISION

7 WORLD TRADE CENTER
NEW YORK, NEW YORK
31ST FL - 40TH FL.

FIRE ALARM SYSTEM
RISER DIAGRAM

DWN. SJ | APP'D | ENGR. JP | CKD | DATE 5-6-89 | SCALE

FIRECOM INCORPORATED
☐ FIRE CONTROLS DIV.
☐ COMMERCIAL RADIO-SOUND DIV.

JOB NO. FJ-26840
DWG. E-504111-4
SHEET OF
REV 20

124-5

QTY	SYMBOL	DESCRIPTION	CAT. NO.	SSA NO.	WIRE SIZE
	A / B	FLOOR SPEAKER LETTER (A,B) INDICATES CKT. F = FLUSH W = SEMI-CONF. S = SURFACE (BRACKET MTD.) BI-DIR.	6348-11 6343-11 6345-11 6343-21	379-73-SA	1 PR @ 16 TW
	A / B	STAIR SPEAKER LETTER (A,B) INDICATES CKT.	6345-11	379-73-SA	1 PR @ 16 TW
	E	ELEVATOR LOBBY SMOKE DETECTOR S = SURFACE F = FLUSH	PID-C	840-76-SA	1 PR @ 18 TW/SH
	A	AREA SMOKE DETECTOR S = SURFACE F = FLUSH	PID-C	840-76-SA	1 PR @ 18 TW/SH
	DD	DUCT SMOKE DETECTOR S = SUPPLY R = RETURN	AL-DH1	840-76-SA	1 PR @ 18 TW/SH
	H	AREA HEAT DETECTOR	DT-135R	258-72-SA	1 PR @ 20 TW
	DD	DUCT HEAT DETECTOR	DTD-6	378-73-SA	1 PR @ 20 TW
	CD	COMBIN. SMOKE & HEAT DETECTOR SURFACE MTD.			1 PR @ 18 TW/SH
	M	MANUAL STATION S = SURFACE F = FLUSH	230	378-73-SA	1 PR @ 20 TW
	WS	WARDEN STATION PR = PUMP ROOM S = SURFACE F = FLUSH	250-11 254-11	379-73-SA	1 PR @ 20 TW/SH 1 PR @ 20 TW
	WMS	COMBIN. MANUAL & WARDEN STATION S = SURFACE F = FLUSH	255	379-73-SA	2 PR @ 20 TW, 1 PR @ 20 TW/SH 1 PR @ 18 TW
	WF	WATERFLOW SWITCH			1 PR @ 20 TW
	TS	TAMPER SWITCH			1 PR @ 20 TW
	SS	SUB-SYSTEM	F.B.O.		1 PR @ 20 TW
	TTB	TRANSMISSION TERMINAL BOX SURFACE MTD		379-73-SA	SEE WIRING DIAGRAM
	RANT	REMOTE ANNUNCIATOR	CR-251	379-73-SA	2 PR @ 16, 1 PR @ 20 TW 1 PR @ 20 TW/SH
	RANT	REMOTE ANNUNCIATOR	9000	379-73-SA	1 PR @ 20 TW/SH, 1 PR @ 20 TW 3 PR @ 18 TW/SH, 2 PR @ 22
	PS	POWER SUPPLY RACK		379-73-SA	SEE WIRING DIAGRAM
	AMP	AMPLIFIER RACK		379-73-SA	SEE WIRING DIAGRAM
	FCS	FIRE COMMAND STATION	850/8520	379-73-SA	SEE WIRING DIAGRAM
	FAN	FAN CONTROL (START,STOP,STATUS)	F.B.C.		2 PR @ 14 1 PR @ 18 (minm)
	IR	INTERFACE RELAY (ONE PER FUNCTION)			1 PR @ 20 TW
	ER	ELEVATOR RECALL JUNCTION BOX	F.B.O.		1 PR @ 18
	J/C	PULSE CUTOUT BOX			
	⊗	STROBE LIGHTS			
		END OF LINE RESISTOR FOR SPEAKER CIRCUITS USE 4.7K FOR MANUAL, WARDEN, SMOKE DETECTOR AND OTHERS USE 1.8K			

NOTE: FOR TENANT SPKRS. & STROBES CONNECTIONS REFER TO DWG C-103114

NOTE:
FOR CROSSED-OUT FLOORS SEE DWG. #B-504111-47, 45, 41, 42, 43

REV.	DATE	BY	DESCRIPTION
		JP	REDRAWN / GENERAL REVISION
		SP	REVISED PER FJ-28829
1	10-30-89	SP	REVISED PER CONTRACT DWG C-041-043 REMOVE 41ST FL AND ADD 46TH FL. CONTRACT DWG C-042 & FJ-28827
2	1-17-89	JP	REVISED PER RETURN SUBMISSION
3	4-4-89	JP	ADDED 38 SPKRS. 5TR. ON 44TH FL. PER FJ-29027
4	6-21-89	BD	ADDED 1 SPKR. REVISE ON 42ND FL. & 43RD FL. PER FJ-29153
5	7-7-89	BD	ADDED 38 SPKRS. 5TR. ON 41ST FL. PER FJ-29027
6	7-19-89	BD	ADDED 11 SPKRS / 5TR ON 44TH FL. PER FJ-29103
7	9-8-89		ADDED WARDEN STATION AT 42 ND FL. PER FJ-28827
8	9-10-89	BD	ADDED AFC-100, COMB/SPKR / STROBES, MANUAL STA, SMK DET, ON 45TH FL PER FJ-29484
9	9-10-89	BD	ADDED 18 COMB/SPKRS/STR. ON 46 TH FL PER FJ-29485
10	2/21/90	ED	REVISED AS PER FJ-29821-20
11	1-31-90	JPM	REVISED DOOR RELEASE WIRING ON 45TH FL. PER FJ-29271.
12	5/9/90	BD	ADDED COMB. SMOKE & HEAT DET. ON 41ST & 43RD FLOORS PER FJ-29485
13	7/24/90	JD	REVISED PER AS BUILT.
14	12/13/91	C.S.	ADDED (1) SPEAKER STROBE ON 47TH PL. PER FJ-63574
15	3/31/97	JD	ADDED CONNECTIONS FOR PRESSURIZATION FANS ON 41ST & 42ND FLOORS PER FJ-65585
16	6/2/97	JT	ADDED (8) SPEAKER / STROBES & (2) MANUAL PULL STATIONS ON 47TH FLOOR PER FJ-65789.
17	1-15-98	CS	ADDED (2) MANUAL PULL STATION ON THE 47TH FL. FOR SOLOMON BROTHERS PER FJ-66258.
18	5/4/00	JM	ADDED (1) RELAY FOR DOOR RELEASE ON THE FOLLOWING FLOORS 44TH & 46TH PER FJ-80208.

7 WORLD TRADE CENTER
NEW YORK, NEW YORK
41ST FL. - ROOF

FIRE ALARM SYSTEM
RISER DIAGRAM

DWN. SJ | APPVD. | ENGR. J P | CHD. | DATE 5-6-89 | SCALE

FIRECOM INCORPORATED
FIRE CONTROL & DEV.

JOB NO. FJ-26840 SHEET 5 OF 8

124-5